Goodman
Air Conditioning & Heating

GSXH5

High-Efficiency Split System Air Conditioner Up to 15.2 SEER2 1½ To 5 Tons

Contents

Nomenclature 2
Product Specifications 3
Expanded Cooling Data 4
Performance Data 18
Dimensions 19
Wiring Diagrams 20
Accessories 22

Standard Features

- High-efficiency scroll compressor
- Factory-installed filter drier
- Fully charged for 15’ of tubing length
- Copper tube/enhanced aluminum fin coil -5mm diameter on 1.5-3.0T
- Service valves with sweat connections and easy-to-access gauge ports
- Contactor with lug connection
- Ground lug connection
- AHRI Certified
- ETL Listed

Cabinet Features

- Removable grille-style top design compliant with UL 60335-2-40
- Heavy-gauge galvanized-steel cabinet
- Attractive Architectural Gray powder-paint finish with 500-hour salt-spray approval
- Steel louver coil guard
- Single-panel access to controls with space provided for field-installed accessories
- When properly anchored, meets the 2020 Florida Building Code unit integrity requirements for hurricane-type winds (Anchor bracket kits available.)

ASK ABOUT ENERGY STAR

Proper sizing and installation of equipment is critical to achieving optimal performance. Split system air conditioners and heat pumps must be matched with appropriate coil components to meet ENERGY STAR® criteria. Ask your contractor for details or visit www.energystar.gov.

10 YEAR PARTS LIMITED WARRANTY*

Intertek

COMPANY WITH QUALITY SYSTEM CERTIFIED BY DNV GL = ISO 9001 =

COMPANY WITH ENVIRONMENTAL SYSTEM CERTIFIED BY DNV GL = ISO 14001 =

BBB ACCREDITED BUSINESS

* Complete warranty details available from your local dealer or at www.goodmanmfg.com. To receive the 10-Year Parts Limited Warranty, online registration must be completed within 60 days of installation. Online registration is not required in California or Quebec. The duration of warranty coverages in Texas differs in some cases.

G	S	X	H	5	0	36	1	0	**
1	2	3	4	5	6	7,8	9	10	11,12

BRAND

G - Goodman® Brand

PRODUCT CATEGORY

S Split System R-410A

UNIT TYPE

X Condenser

Z Heat Pump

FEATURE

N Value	H Enhanced
B Classic	C Premium
M Multi-Family	V Ultimate

SEER2

13.4 - 13.7 = 3	16.6 - 17.5 = 7
13.8 - 14.5 = 4	17.6 - 18.5 = 8
14.6 - 15.5 = 5	18.6 - 19.5 = 9
15.6 - 16.5 = 6	19.6 + = 0

ENGINEERING

Major/Minor Revisions

A - Initial Release

B - 1st Revision

VARIATION

ELECTRICAL

1 208/230 V, 1 Phase, 60 Hz

NOMINAL CAPACITY

18 - 1.5 Ton	42 - 3.5 Tons
24 - 2.0 Tons	48 - 4.0 Tons
30 - 2.5 Tons	60 - 5.0 Tons
36 - 3.0 Tons	

SALES REGION

N North

S Southeast & North

0 All Regions

	GSXH5 01810A*	GSXH5 02410A*	GSXH5 03010A*	GSXH5 03610A*	GSXH5 04210A*	GSXH5 04810A*	GSXH5 06010A*
CAPACITIES							
Nominal Cooling (BTU/h)	18,000	24,000	30,000	36,000	42,000	48,000	60,000
SEER2	15.2	15.2	15.2	15.2	15.2	15.2	15.2
Decibels (dBA)	72	73	72	75	72	73	76
COMPRESSOR							
RLA	9.0	11.5	12.8	14.1	177	19.9	23.7
LRA	42.6	59.5	65	87.4	110.2	110	151
Stage	Single	Single	Single	Single	Single	Single	Two
Type	Scroll	Scroll	Scroll	Scroll	Scroll	Scroll	Scroll
CONDENSER FAN MOTOR							
Motor Type	PSC	PSC	PSC	PSC	PSC	PSC	ECM
Horsepower	1/8	1/6	1/6	1/6	1/4	1/4	1/3
FLA	0.70	0.95	0.95	0.95	1.30	1.30	2.80
REFRIGERATION SYSTEM							
Refrigerant Line Size [1]							
Liquid Line Size (“O.D.)	⅜"	⅜"	⅜"	⅜"	⅜"	⅜"	⅜"
Suction Line Size (“O.D.)	¾"	¾"	⅞"	⅞"	⅞"	⅞"	⅞"
Refrigerant Connection Size							
Liquid Valve Size (“O.D.)	⅜"	⅜"	⅜"	⅜"	⅜"	⅜"	⅜"
Suction Valve Size (“O.D.) [2,3]	¾"	¾"	⅞"	⅞"	⅞"	⅞"	⅞"
Valve Type	Sweat	Sweat	Sweat	Sweat	Sweat	Sweat	Sweat
Refrigerant Charge [4]	64	72	101	102	177	180	209
ELECTRICAL DATA							
Voltage-Phase (60 Hz)	208/230-1	208/230-1	208/230-1	208/230-1	208/230-1	208/230-1	208/230-1
Minimum Circuit Ampacity [5]	11.9	15.3	17.0	18.6	23.4	26.2	32.4
Max. Overcurrent Protection [6]	20	25	25	30	40	45	50
Min / Max Volts	197/253	197/253	197/253	197/253	197/253	197/253	197/253
Electrical Conduit Size	½" or ¾"	½" or ¾"	½" or ¾"	½" or ¾"	½" or ¾"	½" or ¾"	½" or ¾"
EQUIPMENT WEIGHT (LBS)	126	151	202	202	260	260	283
SHIP WEIGHT (LBS)	144	169	224	224	282	282	305
ENERGY STAR® CERTIFIED	ENERGY STAR	ENERGY STAR	ENERGY STAR	ENERGY STAR	ENERGY STAR	ENERGY STAR	ENERGY STAR

[1] Line sizes denoted for 25’ line sets, tested and rated in accordance with ARI Standard 210/240. For other line set lengths or sizes, refer to the Installation Instructions and/or the Long Line Set Applications guide.

[2] Installer will need to supply ¾” to ⅞” adapters for suction line connections.

[3] Installer will need to supply ⅞” to 1⅛” adapters for suction line connections.

[4] Unit is factory charged with refrigerant for 15’ of ⅜” liquid line. System charge must be adjusted per the Final Charge Adjustment procedure found in the Installation Instructions.

[5] Wire size should be determined in accordance with National Electrical Codes; extensive wire runs will require larger wire sizes

[6] Must use time-delay fuses or HACR-type circuit breakers of the same size as noted.

NOTES

- Always check the S&R plate for electrical data on the unit being installed.

ENERGY STAR NOTES

- Proper sizing and installation of equipment is critical to achieving optimal performance. Split system air conditioners and heat pumps must be matched with appropriate coil components to meet ENERGY STAR criteria.
- Ask your contractor for details or visit www.energystar.gov. The www.energystar.gov website provides up-to-date system combinations certified to meet ENERGY STAR requirements.

			Outdoor Ambient Temperature																							
			65ºF				75ºF				85ºF				95ºF				105ºF				115ºF			
			Entering Indoor Wet Bulb Temperature																							
IDB	Airflow		59	63	67	71	59	63	67	71	59	63	67	71	59	63	67	71	59	63	67	71	59	63	67	71
70	510	MBh	17.8	18.0	18.6	-	17.6	17.9	18.4	-	17.2	17.4	18.0	-	16.4	16.6	17.2	-	15.4	15.7	16.2	-	14.5	14.8	15.3	-
		S/T	0.60	0.53	0.40	-	0.61	0.54	0.41	-	0.63	0.56	0.43	-	0.65	0.58	0.45	-	1.00	0.60	0.47	-	1.00	0.65	0.52	-
		ΔT	21	19	15	-	21	19	15	-	21	19	15	-	21	19	15	-	20	18	15	-	22	20	16	-
		kW	1.07	1.07	1.07	-	1.19	1.19	1.18	-	1.31	1.31	1.31	-	1.45	1.45	1.45	-	1.60	1.60	1.60	-	1.78	1.78	1.78	-
		Amps	3.8	3.8	3.8	-	4.3	4.3	4.3	-	4.9	4.9	4.9	-	5.5	5.5	5.5	-	6.2	6.2	6.2	-	7.0	7.0	7.0	-
		Hi PR	239	240	242	-	277	278	280	-	317	318	319	-	359	360	362	-	405	406	408	-	454	455	456	-
		Lo PR	123	125	128	-	130	132	135	-	137	139	142	-	143	144	147	-	148	149	153	-	155	156	159	-
	600	MBh	18.1	18.4	18.9	-	18.0	18.2	18.8	-	17.5	17.8	18.3	-	16.7	17.0	17.5	-	15.7	16.0	16.5	-	14.9	15.1	15.6	-
		S/T	0.66	0.58	0.46	-	0.66	0.59	0.46	-	0.69	0.61	0.49	-	1.00	0.63	0.50	-	1.00	0.65	0.53	-	1.00	0.70	0.57	-
		ΔT	19	17	14	-	19	17	14	-	20	18	14	-	19	17	14	-	19	17	13	-	20	18	15	-
		kW	1.08	1.08	1.08	-	1.19	1.19	1.19	-	1.32	1.32	1.32	-	1.46	1.46	1.45	-	1.61	1.61	1.61	-	1.79	1.79	1.79	-
		Amps	3.8	3.8	3.8	-	4.4	4.3	4.3	-	4.9	4.9	4.9	-	5.6	5.6	5.5	-	6.3	6.3	6.2	-	7.1	7.1	7.1	-
		Hi PR	242	243	245	-	280	281	282	-	319	320	322	-	362	363	364	-	407	408	410	-	456	457	459	-
		Lo PR	126	127	130	-	133	134	138	-	139	141	144	-	145	146	150	-	150	152	155	-	157	159	162	-
	690	MBh	18.6	18.8	19.3	-	18.4	18.7	19.2	-	17.9	18.2	18.7	-	17.1	17.4	17.9	-	16.2	16.4	17.0	-	15.3	15.5	16.1	-
		S/T	0.67	0.60	0.47	-	0.68	0.61	0.48	-	0.70	0.63	0.50	-	1.00	0.65	0.52	-	1.00	0.67	0.54	-	1.00	0.72	0.59	-
		ΔT	18	16	13	-	18	16	12	-	18	16	13	-	18	16	12	-	18	16	12	-	19	17	13	-
		kW	1.09	1.09	1.08	-	1.20	1.20	1.20	-	1.33	1.32	1.32	-	1.46	1.46	1.46	-	1.62	1.61	1.61	-	1.79	1.79	1.79	-
		Amps	3.9	3.9	3.8	-	4.4	4.4	4.4	-	5.0	5.0	4.9	-	5.6	5.6	5.6	-	6.3	6.3	6.3	-	7.1	7.1	7.1	-
		Hi PR	245	246	247	-	282	283	285	-	322	323	324	-	364	365	367	-	410	411	413	-	459	460	462	-
		Lo PR	128	130	133	-	136	137	141	-	142	144	147	-	148	149	153	-	153	155	158	-	160	162	165	-
75	510	MBh	17.8	18.1	18.6	19.4	17.6	17.9	18.4	19.2	17.2	17.4	18.0	18.8	16.4	**16.6**	17.2	18.0	15.4	15.7	16.2	17.0	14.5	14.8	15.3	16.1
		S/T	0.72	0.65	0.52	0.4	0.73	0.66	0.53	0.4	1.00	0.68	0.55	0.4	1.00	**0.70**	0.57	0.4	1.00	0.72	0.59	0.5	1.00	1.00	0.64	0.5
		ΔT	25	23	19	16	25	23	19	16	25	23	20	16	25	**23**	19	16	25	23	19	15	26	24	20	16
		kW	1.07	1.07	1.07	1.1	1.19	1.19	1.18	1.2	1.31	1.31	1.31	1.3	1.45	**1.45**	1.45	1.5	1.60	1.60	1.60	1.6	1.78	1.78	1.78	1.8
		Amps	3.8	3.8	3.8	3.8	4.3	4.3	4.3	4.3	4.9	4.9	4.9	4.9	5.5	**5.5**	5.5	5.5	6.2	6.2	6.2	6.2	7.0	7.0	7.0	7.1
		Hi PR	240	241	242	246.5	277	278	280	284.2	317	318	319	323.6	359	**360**	362	366.1	405	406	408	411.9	454	455	457	460.8
		Lo PR	123	125	128	132.9	131	132	135	140.3	137	139	142	146.9	143	**144**	147	152.4	148	149	153	157.8	155	156	159	164.5
	600	MBh	18.1	18.4	18.9	19.7	18.0	18.2	18.8	19.6	17.5	17.8	18.3	19.1	16.7	**17.0**	17.5	18.3	15.8	16.0	16.5	17.3	14.9	15.1	15.6	16.5
		S/T	0.78	0.71	0.58	0.4	0.79	0.71	0.58	0.4	1.00	0.74	0.61	0.5	1.00	**0.76**	0.63	0.5	1.00	0.78	0.65	0.5	1.00	1.00	0.70	0.6
		ΔT	24	22	18	14	24	22	18	14	24	22	18	14	24	**22**	18	14	23	21	18	14	25	23	19	15
		kW	1.08	1.08	1.08	1.09	1.19	1.19	1.19	1.20	1.32	1.32	1.32	1.33	1.46	**1.46**	1.45	1.46	1.61	1.61	1.61	1.61	1.79	1.79	1.78	1.79
		Amps	3.8	3.8	3.8	3.9	4.3	4.3	4.3	4.4	4.9	4.9	4.9	5.0	5.6	**5.5**	5.5	5.6	6.3	6.2	6.2	6.3	7.1	7.1	7.1	7.1
		Hi PR	242	243	245	249.1	280	281	283	286.8	319	320	322	326.2	362	**363**	365	368.7	408	409	410	414.5	456	458	459	463.4
		Lo PR	126	127	130	135.4	133	135	138	142.8	140	141	144	149.3	145	**147**	150	154.9	150	152	155	160.3	157	159	162	167.0
	690	MBh	18.6	18.8	19.4	20.2	18.4	18.7	19.2	20.0	18.0	18.2	18.7	19.5	17.2	**17.4**	17.9	18.7	16.2	16.4	17.0	17.8	15.3	15.5	16.1	16.9
		S/T	0.80	0.72	0.60	0.5	1.00	0.73	0.60	0.5	1.00	0.75	0.63	0.5	1.00	**0.77**	0.64	0.5	1.00	1.00	0.67	0.5	1.00	1.00	0.71	0.6
		ΔT	22	20	17	13	22	20	17	13	23	21	17	13	22	**20**	17	13	22	20	16	13	23	21	18	14
		kW	1.09	1.08	1.08	1.1	1.20	1.20	1.20	1.2	1.33	1.32	1.32	1.3	1.46	**1.46**	1.46	1.5	1.61	1.61	1.61	1.6	1.79	1.79	1.79	1.8
		Amps	3.9	3.9	3.8	3.9	4.4	4.4	4.4	4.4	5.0	4.9	4.9	5.0	5.6	**5.6**	5.6	5.6	6.3	6.3	6.3	6.3	7.1	7.1	7.1	7.1
		Hi PR	245	246	248	251.8	283	284	285	289.4	322	323	325	328.9	364	**365**	367	371.3	410	411	413	417.1	459	460	462	466.0
		Lo PR	128	130	133	138.3	136	137	141	145.7	142	144	147	152.3	148	**149**	153	157.8	153	155	158	163.2	160	162	165	170.0

IDB: Entering Indoor Dry Bulb Temperature

Shaded area reflects ACCA (TVA) conditions

Amps = outdoor unit amps (comp.+fan)

High and low pressures are measured at the liquid and suction service valves.

kW = Total system power

Expanded Cooling Data — GSXH501810**/CA*TA1818*4A* (cont.)

			Outdoor Ambient Temperature																							
			65ºF				75ºF				85ºF				95ºF				105ºF				115ºF			
			Entering Indoor Wet Bulb Temperature																							
IDB	Airflow		59	63	67	71	59	63	67	71	59	63	67	71	59	63	67	71	59	63	67	71	59	63	67	71
80	510	MBh	17.9	18.1	18.7	19.5	17.7	18.0	18.5	19.3	17.3	17.5	18.1	18.9	16.5	16.7	17.3	18.1	15.5	15.8	16.3	17.1	14.6	14.9	15.4	16.2
		S/T	1.00	0.77	0.64	0.5	1.00	0.78	0.65	0.5	1.00	0.80	0.67	0.5	1.00	0.82	0.69	0.6	1.00	1.00	0.71	0.6	1.00	1.00	0.76	0.6
		ΔT	29	27	24	20	29	27	24	20	30	28	24	20	29	27	24	20	29	27	23	20	30	28	25	21
		kW	1.07	1.07	1.07	1.1	1.19	1.19	1.18	1.2	1.31	1.31	1.31	1.3	1.45	1.45	1.45	1.5	1.60	1.60	1.60	1.6	1.78	1.78	1.78	1.8
		Amps	3.8	3.8	3.8	3.8	4.3	4.3	4.3	4.3	4.9	4.9	4.9	4.9	5.5	5.5	5.5	5.6	6.2	6.2	6.2	6.2	7.0	7.0	7.0	7.1
		Hi PR	240	241	243	247.0	278	279	280	284.6	317	318	320	324.1	360	361	362	366.5	405	407	408	412.3	454	455	457	461.2
		Lo PR	124	125	128	133.4	131	133	136	140.9	138	139	142	147.4	143	145	148	152.9	148	150	153	158.3	155	157	160	165.1
	600	MBh	18.2	18.5	19.0	19.8	18.1	18.3	18.9	19.7	17.6	17.9	18.4	19.2	16.8	17.1	**17.6**	18.4	15.8	16.1	16.6	17.4	15.0	15.2	15.7	16.5
		S/T	1.00	0.83	0.70	0.6	1.00	0.83	0.70	0.6	1.00	0.86	0.73	0.6	1.00	1.00	**0.75**	0.6	1.00	1.00	0.77	0.6	1.00	1.00	0.82	0.7
		ΔT	28	26	22	19	28	26	22	18	28	26	23	19	28	26	**22**	18	28	26	22	18	29	27	23	19
		kW	1.08	1.08	1.08	1.09	1.19	1.19	1.19	1.20	1.32	1.32	1.32	1.33	1.46	1.46	**1.45**	1.46	1.61	1.61	1.61	1.61	1.79	1.79	1.79	1.79
		Amps	3.8	3.8	3.8	3.9	4.4	4.3	4.3	4.4	4.9	4.9	4.9	5.0	5.6	5.6	**5.5**	5.6	6.3	6.2	6.2	6.3	7.1	7.1	7.1	7.1
		Hi PR	243	244	245	249.6	280	281	283	287.2	320	321	323	326.7	362	363	**365**	369.1	408	409	411	414.9	457	458	460	463.8
		Lo PR	126	128	131	135.9	134	135	138	143.4	140	142	145	149.9	146	147	**150**	155.4	151	152	156	160.8	158	159	162	167.6
	690	MBh	18.7	18.9	19.4	20.3	18.5	18.8	19.3	20.1	18.0	18.3	18.8	19.6	17.2	17.5	18.0	18.8	16.3	16.5	17.1	17.9	15.4	15.6	16.2	17.0
		S/T	1.00	0.84	0.71	0.6	1.00	0.85	0.72	0.6	1.00	0.87	0.74	0.6	1.00	1.00	0.76	0.6	1.00	1.00	0.78	0.6	1.00	1.00	0.83	0.7
		ΔT	27	25	21	17	27	25	21	17	27	25	21	18	27	25	21	17	26	25	21	17	28	26	22	18
		kW	1.09	1.09	1.08	1.1	1.20	1.20	1.20	1.2	1.33	1.32	1.32	1.3	1.46	1.46	1.46	1.5	1.61	1.61	1.61	1.6	1.79	1.79	1.79	1.8
		Amps	3.9	3.9	3.8	3.9	4.4	4.4	4.4	4.4	5.0	5.0	4.9	5.0	5.6	5.6	5.6	5.6	6.3	6.3	6.3	6.3	7.1	7.1	7.1	7.1
		Hi PR	245	246	248	252.2	283	284	286	289.9	322	323	325	329.3	365	366	368	371.8	411	412	413	417.6	460	461	462	466.4
		Lo PR	129	131	134	138.8	136	138	141	146.3	143	144	148	152.8	148	150	153	158.3	154	155	159	163.7	161	162	165	170.5
85	510	MBh	18.2	18.4	19.0	19.8	18.0	18.3	18.8	19.6	17.6	17.8	18.4	19.2	16.8	17.0	17.6	18.4	15.8	16.1	16.6	17.4	14.9	15.2	15.7	16.5
		S/T	1.00	0.87	0.74	0.6	1.00	0.87	0.74	0.6	1.00	1.00	0.77	0.6	1.00	1.00	0.79	0.7	1.00	1.00	0.81	0.7	1.00	1.00	1.00	0.7
		ΔT	33	31	28	24	33	31	28	24	33	32	28	24	33	31	28	24	33	31	27	23	34	32	29	25
		kW	1.08	1.07	1.07	1.1	1.19	1.19	1.19	1.2	1.32	1.31	1.31	1.3	1.45	1.45	1.45	1.5	1.60	1.60	1.60	1.6	1.78	1.78	1.78	1.8
		Amps	3.8	3.8	3.8	3.8	4.3	4.3	4.3	4.4	4.9	4.9	4.9	4.9	5.5	5.5	5.5	5.6	6.2	6.2	6.2	6.3	7.1	7.0	7.0	7.1
		Hi PR	241	242	244	248.1	279	280	282	285.8	318	319	321	325.2	361	362	364	367.7	407	408	409	413.5	455	456	458	462.3
		Lo PR	125	127	130	135.3	133	134	138	142.7	139	141	144	149.2	145	146	150	154.7	150	152	155	160.1	157	159	162	166.9
	600	MBh	18.5	18.8	19.3	20.1	18.4	18.6	19.2	20.0	17.9	18.2	18.7	19.5	17.1	17.4	17.9	18.7	16.1	16.4	16.9	17.7	15.3	15.5	16.0	16.8
		S/T	1.00	0.92	0.79	0.7	1.00	1.00	0.80	0.7	1.00	1.00	0.82	0.7	1.00	1.00	0.84	0.7	1.00	1.00	0.86	0.7	1.00	1.00	1.00	0.8
		ΔT	32	30	26	22	32	30	26	22	32	30	26	23	32	30	26	22	32	30	26	22	33	31	27	23
		kW	1.08	1.08	1.08	1.09	1.20	1.19	1.19	1.20	1.32	1.32	1.32	1.33	1.46	1.46	1.46	1.46	1.61	1.61	1.61	1.62	1.79	1.79	1.79	1.80
		Amps	3.8	3.8	3.8	3.9	4.4	4.4	4.3	4.4	4.9	4.9	4.9	5.0	5.6	5.6	5.6	5.6	6.3	6.3	6.3	6.3	7.1	7.1	7.1	7.1
		Hi PR	244	245	247	250.7	281	283	284	288.3	321	322	324	327.8	363	364	366	370.3	409	410	412	416.1	458	459	461	464.9
		Lo PR	128	129	133	137.8	135	137	140	145.2	142	143	147	151.7	147	149	152	157.2	153	154	157	162.6	160	161	164	169.4
	690	MBh	19.0	19.2	19.7	20.6	18.8	19.1	19.6	20.4	18.3	18.6	19.1	19.9	17.5	17.8	18.3	19.1	16.6	16.8	17.4	18.2	15.7	15.9	16.5	17.3
		S/T	1.00	0.94	0.81	0.7	1.00	1.00	0.82	0.7	1.00	1.00	0.84	0.7	1.00	1.00	0.86	0.7	1.00	1.00	1.00	0.7	1.00	1.00	1.00	0.8
		ΔT	31	29	25	21	31	29	25	21	31	29	25	21	31	29	25	21	30	28	25	21	32	30	26	22
		kW	1.09	1.09	1.09	1.1	1.20	1.20	1.20	1.2	1.33	1.33	1.32	1.3	1.46	1.46	1.46	1.5	1.62	1.62	1.61	1.6	1.80	1.80	1.79	1.8
		Amps	3.9	3.9	3.9	3.9	4.4	4.4	4.4	4.4	5.0	5.0	5.0	5.0	5.6	5.6	5.6	5.6	6.3	6.3	6.3	6.3	7.1	7.1	7.1	7.1
		Hi PR	246	247	249	253.3	284	285	287	291.0	324	325	326	330.4	366	367	369	372.9	412	413	415	418.7	461	462	463	467.6
		Lo PR	131	132	135	140.7	138	140	143	148.1	145	146	149	154.6	150	152	155	160.1	156	157	160	165.6	162	164	167	172.3

IDB: Entering Indoor Dry Bulb Temperature

Shaded area reflects AHRI conditions

Amps = outdoor unit amps (comp.+fan)

High and low pressures are measured at the liquid and suction service valves.

kW = Total system power

			Outdoor Ambient Temperature																							
			65ºF				75ºF				85ºF				95ºF				105ºF				115ºF			
			Entering Indoor Wet Bulb Temperature																							
IDB	Airflow		59	63	67	71	59	63	67	71	59	63	67	71	59	63	67	71	59	63	67	71	59	63	67	71
70	700	MBh	24.0	24.4	25.1	-	23.8	24.1	24.9	-	23.2	23.5	24.2	-	22.1	22.4	23.2	-	20.8	21.1	21.8	-	19.6	19.9	20.6	-
		S/T	0.58	0.51	0.38	-	0.58	0.51	0.38	-	0.61	0.54	0.41	-	0.63	0.55	0.43	-	1.00	0.57	0.45	-	1.00	0.62	0.49	-
		ΔT	20	18	15	-	20	18	15	-	20	18	15	-	20	18	15	-	20	18	14	-	21	19	15	-
		kW	1.43	1.43	1.42	-	1.58	1.58	1.57	-	1.74	1.74	1.74	-	1.92	1.92	1.92	-	2.13	2.12	2.12	-	2.36	2.36	2.36	-
		Amps	4.9	4.9	4.9	-	5.6	5.6	5.6	-	6.4	6.4	6.3	-	7.2	7.2	7.2	-	8.1	8.1	8.1	-	9.2	9.2	9.2	-
		Hi PR	239	240	241	-	276	277	279	-	316	317	318	-	358	359	361	-	404	405	406	-	453	454	455	-
		Lo PR	122	124	127	-	129	131	134	-	136	137	141	-	141	143	146	-	147	148	151	-	154	155	158	-
	795	MBh	24.3	24.7	25.4	-	24.1	24.4	25.2	-	23.5	23.8	24.5	-	22.4	22.7	23.5	-	21.1	21.4	22.1	-	19.9	20.2	20.9	-
		S/T	0.63	0.56	0.43	-	0.64	0.57	0.44	-	0.66	0.59	0.46	-	1.00	0.61	0.48	-	1.00	0.63	0.50	-	1.00	0.68	0.55	-
		ΔT	19	17	14	-	19	17	13	-	19	17	14	-	19	17	13	-	19	17	13	-	20	18	14	-
		kW	1.44	1.43	1.43	-	1.58	1.58	1.58	-	1.75	1.75	1.75	-	1.93	1.93	1.93	-	2.13	2.13	2.13	-	2.37	2.37	2.37	-
		Amps	5.0	4.9	4.9	-	5.6	5.6	5.6	-	6.4	6.4	6.4	-	7.2	7.2	7.2	-	8.1	8.1	8.1	-	9.2	9.2	9.2	-
		Hi PR	240	241	243	-	278	279	281	-	317	319	320	-	360	361	363	-	406	407	408	-	455	456	457	-
		Lo PR	124	125	128	-	131	133	136	-	138	139	142	-	143	145	148	-	149	150	153	-	155	157	160	-
	915	MBh	24.8	25.1	25.8	-	24.6	24.9	25.6	-	24.0	24.3	25.0	-	22.9	23.2	23.9	-	21.6	21.9	22.6	-	20.3	20.7	21.4	-
		S/T	0.67	0.60	0.47	-	0.67	0.60	0.47	-	0.70	0.63	0.50	-	1.00	0.64	0.51	-	1.00	0.66	0.54	-	1.00	0.71	0.58	-
		ΔT	18	16	12	-	18	16	12	-	18	16	13	-	18	16	12	-	17	16	12	-	19	17	13	-
		kW	1.44	1.44	1.44	-	1.59	1.59	1.59	-	1.76	1.76	1.76	-	1.94	1.94	1.94	-	2.14	2.14	2.14	-	2.38	2.38	2.37	-
		Amps	5.0	5.0	5.0	-	5.7	5.7	5.7	-	6.4	6.4	6.4	-	7.3	7.3	7.2	-	8.2	8.2	8.2	-	9.3	9.3	9.2	-
		Hi PR	243	244	246	-	280	281	283	-	320	321	323	-	362	363	365	-	408	409	411	-	457	458	460	-
		Lo PR	126	128	131	-	134	135	138	-	140	142	145	-	146	147	150	-	151	152	156	-	158	159	162	-
75	700	MBh	24.0	24.4	25.1	26.2	23.8	24.2	24.9	26.0	23.2	23.5	24.3	25.3	22.1	**22.5**	23.2	24.3	20.8	21.1	21.9	23.0	19.6	19.9	20.7	21.7
		S/T	0.70	0.63	0.50	0.4	0.71	0.63	0.51	0.4	1.00	0.66	0.53	0.4	1.00	**0.68**	0.55	0.4	1.00	0.70	0.57	0.4	1.00	1.00	0.62	0.5
		ΔT	24	22	19	15	24	22	19	15	24	22	19	15	24	**22**	19	15	24	22	18	15	25	23	19	16
		kW	1.43	1.43	1.42	1.4	1.58	1.58	1.57	1.6	1.74	1.74	1.74	1.8	1.92	**1.92**	1.92	1.9	2.12	2.12	2.12	2.1	2.36	2.36	2.36	2.4
		Amps	4.9	4.9	4.9	5.0	5.6	5.6	5.6	5.6	6.4	6.4	6.3	6.4	7.2	**7.2**	7.2	7.2	8.1	8.1	8.1	8.1	9.2	9.2	9.2	9.2
		Hi PR	239	240	241	245.6	276	277	279	283.2	316	317	318	322.6	358	**359**	361	365.1	404	405	407	410.8	453	454	456	459.7
		Lo PR	122	124	127	131.9	129	131	134	139.3	136	137	141	145.8	141	**143**	146	151.3	147	148	151	156.7	154	155	158	163.4
	795	MBh	24.3	24.7	25.4	26.5	24.1	24.5	25.2	26.3	23.5	23.8	24.6	25.6	22.4	**22.8**	23.5	24.6	21.1	21.4	22.2	23.3	19.9	20.2	21.0	22.0
		S/T	0.75	0.68	0.55	0.4	0.76	0.69	0.56	0.4	1.00	0.71	0.58	0.4	1.00	**0.73**	0.60	0.5	1.00	0.75	0.62	0.5	1.00	1.00	0.67	0.5
		ΔT	23	21	18	14	23	21	18	14	23	21	18	14	23	**21**	18	14	23	21	17	14	24	22	18	15
		kW	1.43	1.43	1.43	1.44	1.58	1.58	1.58	1.59	1.75	1.75	1.75	1.76	1.93	**1.93**	1.93	1.94	2.13	2.13	2.13	2.14	2.37	2.37	2.36	2.38
		Amps	4.9	4.9	4.9	5.0	5.6	5.6	5.6	5.7	6.4	6.4	6.4	6.4	7.2	**7.2**	7.2	7.3	8.1	8.1	8.1	8.2	9.2	9.2	9.2	9.3
		Hi PR	241	242	243	247.5	278	279	281	285.1	318	319	320	324.6	360	**361**	363	367.0	406	407	409	412.8	455	456	457	461.6
		Lo PR	124	125	128	133.6	131	133	136	141.0	138	139	142	147.5	143	**145**	148	153.0	149	150	153	158.4	155	157	160	165.1
	915	MBh	24.8	25.1	25.9	27.0	24.6	24.9	25.6	26.7	24.0	24.3	25.0	26.1	22.9	**23.2**	23.9	25.0	21.6	21.9	22.6	23.7	20.4	20.7	21.4	22.5
		S/T	0.79	0.72	0.59	0.5	1.00	0.72	0.60	0.5	1.00	0.75	0.62	0.5	1.00	**0.77**	0.64	0.5	1.00	0.79	0.66	0.5	1.00	1.00	0.71	0.6
		ΔT	22	20	16	13	22	20	16	13	22	20	17	13	22	**20**	16	13	21	20	16	13	23	21	17	14
		kW	1.44	1.44	1.44	1.4	1.59	1.59	1.59	1.6	1.76	1.76	1.75	1.8	1.94	**1.94**	1.93	1.9	2.14	2.14	2.14	2.1	2.38	2.38	2.37	2.4
		Amps	5.0	5.0	5.0	5.0	5.7	5.7	5.7	5.7	6.4	6.4	6.4	6.5	7.3	**7.3**	7.2	7.3	8.2	8.2	8.2	8.2	9.3	9.3	9.2	9.3
		Hi PR	243	244	246	249.9	281	282	283	287.5	320	321	323	326.9	363	**364**	365	369.4	408	409	411	415.1	457	458	460	464.0
		Lo PR	126	128	131	136.0	134	135	138	143.4	140	142	145	149.9	146	**147**	150	155.4	151	153	156	160.8	158	159	162	167.6

IDB: Entering Indoor Dry Bulb Temperature (ºF)
High and low pressures are measured at the liquid and suction service valves.

Shaded area reflects ACCA (TVA) conditions

MBH = Net Total Capacity (1000 Btu/hr)
S/T = Sensible To Total Capacity Ratio

HI PR = Pressure at liquid service valve, psig
LO PR = Pressure at vapor service valve, psig

Amps = outdoor unit amps (comp.+fan)
kW = Total system power

Expanded Cooling Data — GSXH502410**/CA*TA2422*4A* (cont.)

			Outdoor Ambient Temperature																							
			65ºF				75ºF				85ºF				95ºF				105ºF				115ºF			
			Entering Indoor Wet Bulb Temperature																							
IDB	Airflow		59	63	67	71	59	63	67	71	59	63	67	71	59	63	67	71	59	63	67	71	59	63	67	71
80	700	MBh	24.2	24.5	25.2	26.3	23.9	24.3	25.0	26.1	23.3	23.7	24.4	25.5	22.2	22.6	23.3	24.4	20.9	21.3	22.0	23.1	19.7	20.1	20.8	21.9
		S/T	1.00	0.75	0.62	0.5	1.00	0.75	0.62	0.5	1.00	0.78	0.65	0.5	1.00	0.80	0.67	0.5	1.00	1.00	0.69	0.6	1.00	1.00	0.74	0.6
		ΔT	28	26	23	19	28	26	23	19	28	26	23	19	28	26	23	19	28	26	22	19	29	27	24	20
		kW	1.43	1.43	1.42	1.4	1.58	1.58	1.57	1.6	1.74	1.74	1.74	1.8	1.92	1.92	1.92	1.9	2.13	2.12	2.12	2.1	2.36	2.36	2.36	2.4
		Amps	4.9	4.9	4.9	5.0	5.6	5.6	5.6	5.6	6.4	6.4	6.3	6.4	7.2	7.2	7.2	7.2	8.1	8.1	8.1	8.1	9.2	9.2	9.2	9.2
		Hi PR	239	240	242	246.0	277	278	279	283.7	316	317	319	323.1	359	360	361	365.5	404	405	407	411.3	453	454	456	460.1
		Lo PR	123	124	127	132.4	130	132	135	139.8	137	138	141	146.3	142	144	147	151.8	147	149	152	157.2	154	156	159	164.0
	795	MBh	24.5	24.8	25.5	26.6	24.2	24.6	25.3	26.4	23.6	24.0	24.7	25.8	22.5	22.9	**23.6**	24.7	21.2	21.6	22.3	23.4	20.0	20.4	21.1	22.2
		S/T	1.00	0.80	0.67	0.5	1.00	0.81	0.68	0.5	1.00	0.83	0.70	0.6	1.00	0.85	**0.72**	0.6	1.00	1.00	0.74	0.6	1.00	1.00	0.79	0.7
		ΔT	27	25	22	18	27	25	22	18	27	25	22	18	27	25	**22**	18	27	25	21	18	28	26	23	19
		kW	1.44	1.43	1.43	1.44	1.58	1.58	1.58	1.59	1.75	1.75	1.75	1.76	1.93	1.93	**1.93**	1.94	2.13	2.13	2.13	2.14	2.37	2.37	2.37	2.38
		Amps	5.0	4.9	4.9	5.0	5.6	5.6	5.6	5.7	6.4	6.4	6.4	6.4	7.2	7.2	**7.2**	7.3	8.1	8.1	8.1	8.2	9.2	9.2	9.2	9.3
		Hi PR	241	242	244	248.0	279	280	281	285.6	318	319	321	325.0	361	362	**363**	367.4	406	407	409	413.2	455	456	458	462.0
		Lo PR	124	126	129	134.1	132	133	136	141.5	138	140	143	148.0	144	145	**148**	153.5	149	151	154	158.9	156	157	160	165.7
	915	MBh	24.9	25.3	26.0	27.1	24.7	25.1	25.8	26.9	24.1	24.4	25.1	26.2	23.0	23.3	24.1	25.2	21.7	22.0	22.7	23.8	20.5	20.8	21.5	22.6
		S/T	1.00	0.84	0.71	0.6	1.00	0.84	0.71	0.6	1.00	0.87	0.74	0.6	1.00	1.00	0.76	0.6	1.00	1.00	0.78	0.6	1.00	1.00	0.83	0.7
		ΔT	26	24	21	17	26	24	20	17	26	24	21	17	26	24	20	17	26	24	20	17	27	25	21	18
		kW	1.44	1.44	1.44	1.5	1.59	1.59	1.59	1.6	1.76	1.76	1.76	1.8	1.94	1.94	1.94	1.9	2.14	2.14	2.14	2.1	2.38	2.38	2.37	2.4
		Amps	5.0	5.0	5.0	5.0	5.7	5.7	5.7	5.7	6.4	6.4	6.4	6.5	7.3	7.3	7.2	7.3	8.2	8.2	8.2	8.2	9.3	9.3	9.2	9.3
		Hi PR	243	245	246	250.3	281	282	284	288.0	321	322	323	327.4	363	364	366	369.8	409	410	411	415.6	458	459	460	464.4
		Lo PR	127	128	131	136.5	134	136	139	144.0	141	142	145	150.5	146	148	151	156.0	152	153	156	161.3	158	160	163	168.1
85	700	MBh	24.6	24.9	25.6	26.7	24.4	24.7	25.4	26.5	23.7	24.1	24.8	25.9	22.6	**23.0**	23.7	24.8	21.3	21.7	22.4	23.5	20.1	20.5	21.2	22.3
		S/T	1.00	0.84	0.71	0.6	1.00	0.85	0.72	0.6	1.00	1.00	0.74	0.6	1.00	**1.00**	0.76	0.6	1.00	1.00	0.78	0.6	1.00	1.00	1.00	0.7
		ΔT	32	30	26	23	32	30	26	23	32	30	27	23	32	**30**	26	23	31	29	26	22	32	31	27	24
		kW	1.43	1.43	1.43	1.4	1.58	1.58	1.58	1.6	1.75	1.75	1.74	1.8	1.93	**1.93**	1.92	1.9	2.13	2.13	2.12	2.1	2.36	2.36	2.36	2.4
		Amps	4.9	4.9	4.9	5.0	5.6	5.6	5.6	5.7	6.4	6.4	6.4	6.4	7.2	**7.2**	7.2	7.2	8.1	8.1	8.1	8.2	9.2	9.2	9.2	9.2
		Hi PR	240	241	243	247.2	278	279	281	284.8	317	318	320	324.2	360	**361**	362	366.6	406	407	408	412.4	454	455	457	461.2
		Lo PR	124	126	129	134.2	132	133	136	141.6	138	140	143	148.1	144	**145**	148	153.6	149	151	154	159.0	156	157	161	165.8
	795	MBh	24.9	25.2	25.9	27.0	24.7	25.0	25.7	26.8	24.0	24.4	25.1	26.2	22.9	**23.3**	24.0	25.1	21.6	22.0	22.7	23.8	20.4	20.8	21.5	22.6
		S/T	1.00	0.90	0.77	0.6	1.00	0.90	0.77	0.6	1.00	1.00	0.80	0.7	1.00	**1.00**	0.82	0.7	1.00	1.00	0.84	0.7	1.00	1.00	1.00	0.8
		ΔT	31	29	25	22	31	29	25	22	31	29	25	22	31	**29**	25	22	30	28	25	21	31	30	26	23
		kW	1.44	1.44	1.43	1.45	1.59	1.59	1.58	1.59	1.75	1.75	1.75	1.76	1.93	**1.93**	1.93	1.94	2.14	2.13	2.13	2.14	2.37	2.37	2.37	2.38
		Amps	5.0	5.0	4.9	5.0	5.6	5.6	5.6	5.7	6.4	6.4	6.4	6.4	7.2	**7.2**	7.2	7.3	8.2	8.2	8.1	8.2	9.2	9.2	9.2	9.3
		Hi PR	242	243	245	249.1	280	281	283	286.7	319	320	322	326.1	362	**363**	364	368.6	407	408	410	414.3	456	457	459	463.2
		Lo PR	126	128	131	135.9	134	135	138	143.4	140	142	145	149.9	146	**147**	150	155.4	151	152	156	160.7	158	159	162	167.5
	915	MBh	25.3	25.7	26.4	27.5	25.1	25.5	26.2	27.3	24.5	24.8	25.5	26.6	23.4	**23.8**	24.5	25.6	22.1	22.4	23.2	24.2	20.9	21.2	21.9	23.0
		S/T	1.00	0.93	0.80	0.7	1.00	1.00	0.81	0.7	1.00	1.00	0.83	0.7	1.00	**1.00**	0.85	0.7	1.00	1.00	0.87	0.7	1.00	1.00	1.00	0.8
		ΔT	29	28	24	21	29	28	24	21	30	28	24	21	29	**28**	24	21	29	27	24	20	30	28	25	21
		kW	1.45	1.44	1.44	1.5	1.59	1.59	1.59	1.6	1.76	1.76	1.76	1.8	1.94	**1.94**	1.94	1.9	2.14	2.14	2.14	2.2	2.38	2.38	2.38	2.4
		Amps	5.0	5.0	5.0	5.0	5.7	5.7	5.7	5.7	6.4	6.4	6.4	6.5	7.3	**7.3**	7.3	7.3	8.2	8.2	8.2	8.2	9.3	9.3	9.3	9.3
		Hi PR	245	246	247	251.5	282	283	285	289.1	322	323	324	328.5	364	**365**	367	370.9	410	411	413	416.7	459	460	461	465.5
		Lo PR	129	130	133	138.4	136	137	141	145.8	142	144	147	152.3	148	**149**	153	157.8	153	155	158	163.2	160	162	165	169.9

IDB: Entering Indoor Dry Bulb Temperature

High and low pressures are measured at the liquid and suction service valves.

Shaded area reflects ACCA (TVA) conditions

MBH = Net Total Capacity (1000 Btu/hr)

S/T = Sensible To Total Capacity Ratio

HI PR = Pressure at liquid service valve, psig

LO PR = Pressure at vapor service valve, psig

Amps = outdoor unit amps (comp.+fan)

kW = Total system power

			Outdoor Ambient Temperature																							
			65ºF				75ºF				85ºF				95ºF				105ºF				115ºF			
			Entering Indoor Wet Bulb Temperature																							
IDB	Airflow		59	63	67	71	59	63	67	71	59	63	67	71	59	63	67	71	59	63	67	71	59	63	67	71
70	860	MBh	28.9	29.3	30.1	-	28.6	29.0	29.9	-	27.8	28.2	29.1	-	26.5	26.9	27.8	-	25.0	25.4	26.2	-	23.5	23.9	24.8	-
		S/T	0.58	0.51	0.38	-	0.59	0.51	0.38	-	0.61	0.54	0.41	-	0.63	0.56	0.42	-	1.00	0.58	0.45	-	1.00	0.63	0.50	-
		ΔT	19	18	14	-	19	18	14	-	20	18	14	-	19	18	14	-	19	17	14	-	20	18	15	-
		kW	1.69	1.69	1.69		1.87	1.87	1.86	-	2.06	2.06	2.06	-	2.27	2.27	2.27	-	2.50	2.50	2.50	-	2.78	2.78	2.78	-
		Amps	5.7	5.7	5.7	-	6.5	6.5	6.5	-	7.4	7.4	7.4	-	8.4	8.4	8.4	-	9.4	9.4	9.4	-	10.7	10.7	10.7	-
		Hi PR	236	237	238	-	273	274	276	-	312	313	315	-	354	355	356	-	399	400	402	-	447	448	450	-
		Lo PR	121	122	125	-	128	130	133	-	134	136	139	-	140	141	145	-	145	147	150	-	152	153	157	-
	1000	MBh	29.3	29.7	30.5	-	29.0	29.4	30.3	-	28.3	28.7	29.5	-	27.0	27.4	28.2	-	25.4	25.8	26.6	-	23.9	24.3	25.2	-
		S/T	0.65	0.57	0.44	-	0.66	0.58	0.45	-	0.68	0.61	0.47	-	0.70	0.62	0.49	-	1.00	0.65	0.51	-	1.00	0.70	0.56	-
		ΔT	18	16	13	-	18	16	13	-	18	17	13	-	18	16	13	-	18	16	13	-	19	17	14	-
		kW	1.70	1.70	1.70	-	1.88	1.88	1.87	-	2.07	2.07	2.07	-	2.28	2.28	2.28	-	2.52	2.51	2.51	-	2.79	2.79	2.79	-
		Amps	5.8	5.8	5.8	-	6.6	6.6	6.6	-	7.5	7.5	7.4	-	8.4	8.4	8.4	-	9.5	9.5	9.5	-	10.7	10.7	10.7	-
		Hi PR	238	239	241	-	275	276	278	-	314	315	317	-	356	357	359	-	401	402	404	-	450	451	452	-
		Lo PR	123	124	127	-	130	132	135	-	136	138	141	-	142	143	147	-	147	149	152	-	154	155	159	-
	1090	MBh	29.6	30.0	30.9	-	29.3	29.7	30.6	-	28.6	29.0	29.9	-	27.3	27.7	28.6	-	25.7	26.1	27.0	-	24.2	24.7	25.5	-
		S/T	0.68	0.60	0.47	-	0.68	0.61	0.47	-	0.71	0.63	0.50	-	1.00	0.65	0.52	-	1.00	0.67	0.54	-	1.00	0.72	0.59	-
		ΔT	18	16	12	-	17	16	12	-	18	16	13	-	17	16	12	-	17	15	12	-	18	17	13	-
		kW	1.71	1.71	1.71	-	1.88	1.88	1.88	-	2.08	2.08	2.07	-	2.29	2.29	2.28	-	2.52	2.52	2.52	-	2.80	2.79	2.79	-
		Amps	5.8	5.8	5.8	-	6.6	6.6	6.6	-	7.5	7.5	7.5	-	8.4	8.4	8.4	-	9.5	9.5	9.5	-	10.8	10.8	10.8	-
		Hi PR	239	240	242	-	276	278	279	-	315	317	318	-	357	358	360	-	403	404	405	-	451	452	454	-
		Lo PR	124	126	129	-	131	133	136	-	138	139	142	-	143	145	148	-	149	150	153	-	155	157	160	-
75	860	MBh	28.9	29.3	30.1	31.5	28.6	29.0	29.9	31.2	27.9	28.3	29.1	30.4	26.6	**27.0**	27.8	29.1	25.0	25.4	26.2	27.6	23.5	23.9	24.8	26.1
		S/T	0.71	0.63	0.50	0.4	0.71	0.64	0.51	0.4	1.00	0.66	0.53	0.4	1.00	**0.68**	0.55	0.4	1.00	0.70	0.57	0.4	1.00	0.75	0.62	0.5
		ΔT	23	22	18	15	23	21	18	15	24	22	18	15	23	**21**	18	15	23	21	18	14	24	22	19	16
		kW	1.69	1.69	1.69	1.7	1.87	1.87	1.86	1.9	2.06	2.06	2.06	2.1	2.27	**2.27**	2.27	2.3	2.50	2.50	2.50	2.5	2.78	2.78	2.77	2.8
		Amps	5.7	5.7	5.7	5.8	6.5	6.5	6.5	6.6	7.4	7.4	7.4	7.5	8.4	**8.4**	8.3	8.4	9.4	9.4	9.4	9.5	10.7	10.7	10.7	10.7
		Hi PR	236	237	239	242.6	273	274	276	279.8	312	313	315	318.8	354	**355**	357	360.8	399	400	402	406.1	448	449	450	454.4
		Lo PR	121	122	125	130.4	128	130	133	137.8	135	136	139	144.2	140	**141**	145	149.7	145	147	150	155.0	152	154	157	161.7
	1000	MBh	29.3	29.7	30.6	31.9	29.0	29.4	30.3	31.6	28.3	28.7	29.5	30.9	27.0	**27.4**	28.3	29.6	25.4	25.8	26.7	28.0	23.9	24.4	25.2	26.5
		S/T	0.77	0.70	0.57	0.4	0.78	0.71	0.57	0.4	1.00	0.73	0.60	0.5	1.00	**0.75**	0.62	0.5	1.00	0.77	0.64	0.5	1.00	1.00	0.69	0.6
		ΔT	22	20	17	14	22	20	17	13	22	21	17	14	22	**20**	17	13	22	20	17	13	23	21	18	14
		kW	1.70	1.70	1.70	1.71	1.88	1.88	1.87	1.89	2.07	2.07	2.07	2.08	2.28	**2.28**	2.28	2.29	2.51	2.51	2.51	2.52	2.79	2.79	2.78	2.80
		Amps	5.8	5.8	5.8	5.8	6.6	6.6	6.6	6.6	7.5	7.5	7.4	7.5	8.4	**8.4**	8.4	8.5	9.5	9.5	9.5	9.5	10.7	10.7	10.7	10.8
		Hi PR	238	239	241	244.9	275	276	278	282.1	314	315	317	321.1	356	**357**	359	363.1	402	403	404	408.3	450	451	453	456.6
		Lo PR	123	124	127	132.4	130	132	135	139.8	137	138	141	146.2	142	**143**	147	151.7	147	149	152	157.0	154	155	159	163.7
	1090	MBh	29.6	30.0	30.9	32.2	29.4	29.8	30.6	31.9	28.6	29.0	29.9	31.2	27.3	**27.7**	28.6	29.9	25.7	26.1	27.0	28.3	24.3	24.7	25.5	26.9
		S/T	0.80	0.73	0.59	0.5	0.81	0.73	0.60	0.5	1.00	0.76	0.63	0.5	1.00	**0.78**	0.64	0.5	1.00	0.80	0.67	0.5	1.00	1.00	0.72	0.6
		ΔT	21	20	16	13	21	20	16	13	22	20	17	13	21	**20**	16	13	21	19	16	13	22	20	17	14
		kW	1.71	1.71	1.71	1.7	1.88	1.88	1.88	1.9	2.08	2.07	2.07	2.1	2.29	**2.28**	2.28	2.3	2.52	2.52	2.52	2.5	2.79	2.79	2.79	2.8
		Amps	5.8	5.8	5.8	5.8	6.6	6.6	6.6	6.6	7.5	7.5	7.5	7.5	8.4	**8.4**	8.4	8.5	9.5	9.5	9.5	9.6	10.8	10.8	10.7	10.8
		Hi PR	239	240	242	246.3	277	278	279	283.5	316	317	318	322.5	358	**359**	360	364.5	403	404	406	409.7	451	452	454	458.0
		Lo PR	124	126	129	133.8	131	133	136	141.2	138	139	142	147.6	143	**145**	148	153.1	149	150	153	158.4	155	157	160	165.1

IDB: Entering Indoor Dry Bulb Temperature

Shaded area reflects ACCA (TVA) conditions

Amps = outdoor unit amps (comp.+fan)

High and low pressures are measured at the liquid and suction service valves.

kW = Total system power

Expanded Cooling Data — GSXH503010**/CA*TA3022*4A* (cont.)

			Outdoor Ambient Temperature																							
			65ºF				75ºF				85ºF				95ºF				105ºF				115ºF			
			Entering Indoor Wet Bulb Temperature																							
IDB	Airflow		59	63	67	71	59	63	67	71	59	63	67	71	59	63	67	71	59	63	67	71	59	63	67	71
80	860	MBh	29.0	29.4	30.3	31.6	28.8	29.2	30.0	31.4	28.0	28.4	29.3	30.6	26.7	27.1	28.0	29.3	25.1	25.5	26.4	27.7	23.7	24.1	24.9	26.3
		S/T	0.83	0.76	0.62	0.5	1.00	0.76	0.63	0.5	1.00	0.79	0.65	0.5	1.00	0.80	0.67	0.5	1.00	1.00	0.69	0.6	1.00	1.00	0.74	0.6
		ΔT	27	25	22	19	27	25	22	19	27	26	22	19	27	25	22	19	27	25	22	18	28	26	23	20
		kW	1.69	1.69	1.69	1.7	1.87	1.87	1.86	1.9	2.06	2.06	2.06	2.1	2.27	2.27	2.27	2.3	2.50	2.50	2.50	2.5	2.78	2.78	2.77	2.8
		Amps	5.7	5.7	5.7	5.8	6.5	6.5	6.5	6.6	7.4	7.4	7.4	7.5	8.4	8.4	8.4	8.4	9.4	9.4	9.4	9.5	10.7	10.7	10.7	10.7
		Hi PR	236	237	239	243.0	273	274	276	280.3	312	313	315	319.3	354	355	357	361.2	400	401	402	406.5	448	449	451	454.8
		Lo PR	121	123	126	131.0	129	130	133	138.3	135	137	140	144.8	141	142	145	150.2	146	147	150	155.6	153	154	157	162.3
	1000	MBh	29.4	29.8	30.7	32.0	29.2	29.6	30.5	31.8	28.4	28.8	29.7	31.0	27.1	27.5	**28.4**	29.7	25.5	26.0	26.8	28.1	24.1	24.5	25.4	26.7
		S/T	1.00	0.82	0.69	0.6	1.00	0.83	0.70	0.6	1.00	0.85	0.72	0.6	1.00	0.87	**0.74**	0.6	1.00	1.00	0.76	0.6	1.00	1.00	0.81	0.7
		ΔT	26	24	21	17	26	24	21	17	26	24	21	18	26	24	**21**	17	26	24	21	17	27	25	22	18
		kW	1.70	1.70	1.70	1.71	1.88	1.88	1.87	1.89	2.07	2.07	2.07	2.08	2.28	2.28	**2.28**	2.29	2.51	2.51	2.51	2.52	2.79	2.79	2.79	2.80
		Amps	5.8	5.8	5.8	5.8	6.6	6.6	6.6	6.6	7.5	7.5	7.4	7.5	8.4	8.4	**8.4**	8.5	9.5	9.5	9.5	9.5	10.7	10.7	10.7	10.8
		Hi PR	239	240	241	245.3	276	277	278	282.5	315	316	317	321.5	357	358	**359**	363.5	402	403	405	408.8	450	451	453	457.1
		Lo PR	123	125	128	133.0	131	132	135	140.3	137	139	142	146.8	142	144	**147**	152.2	148	149	152	157.6	155	156	159	164.3
	1090	MBh	29.8	30.2	31.0	32.3	29.5	29.9	30.8	32.1	28.7	29.2	30.0	31.3	27.4	27.9	28.7	30.0	25.9	26.3	27.1	28.5	24.4	24.8	25.7	27.0
		S/T	1.00	0.85	0.72	0.6	1.00	0.86	0.72	0.6	1.00	0.88	0.75	0.6	1.00	1.00	0.77	0.6	1.00	1.00	0.79	0.6	1.00	1.00	0.84	0.7
		ΔT	25	24	20	17	25	24	20	17	26	24	20	17	25	24	20	17	25	23	20	17	26	24	21	18
		kW	1.71	1.71	1.71	1.7	1.88	1.88	1.88	1.9	2.08	2.08	2.07	2.1	2.29	2.29	2.28	2.3	2.52	2.52	2.52	2.5	2.79	2.79	2.79	2.8
		Amps	5.8	5.8	5.8	5.8	6.6	6.6	6.6	6.6	7.5	7.5	7.5	7.5	8.4	8.4	8.4	8.5	9.5	9.5	9.5	9.6	10.8	10.8	10.8	10.8
		Hi PR	240	241	243	246.7	277	278	280	283.9	316	317	319	322.9	358	359	361	364.9	403	404	406	410.2	452	453	454	458.5
		Lo PR	125	126	129	134.4	132	133	137	141.7	138	140	143	148.2	144	145	148	153.6	149	151	154	159.0	156	157	160	165.6
85	860	MBh	29.5	29.9	30.8	32.1	29.2	29.7	30.5	31.8	28.5	28.9	29.8	31.1	27.2	27.6	28.5	29.8	25.6	26.0	26.9	28.2	24.2	24.6	25.4	26.7
		S/T	1.00	0.85	0.72	0.6	1.00	0.86	0.73	0.6	1.00	1.00	0.75	0.6	1.00	1.00	0.77	0.6	1.00	1.00	0.79	0.7	1.00	1.00	1.00	0.7
		ΔT	31	29	26	22	31	29	26	22	31	29	26	22	31	29	26	22	30	29	25	22	32	30	26	23
		kW	1.70	1.70	1.69	1.7	1.87	1.87	1.87	1.9	2.06	2.06	2.06	2.1	2.27	2.27	2.27	2.3	2.51	2.51	2.50	2.5	2.78	2.78	2.78	2.8
		Amps	5.8	5.7	5.7	5.8	6.5	6.5	6.5	6.6	7.4	7.4	7.4	7.5	8.4	8.4	8.4	8.4	9.5	9.5	9.4	9.5	10.7	10.7	10.7	10.8
		Hi PR	237	238	240	244.2	275	276	277	281.4	314	315	316	320.4	356	357	358	362.4	401	402	404	407.6	449	450	452	455.9
		Lo PR	123	125	128	132.8	130	132	135	140.2	137	138	141	146.6	142	144	147	152.0	148	149	152	157.4	154	156	159	164.1
	1000	MBh	29.9	30.3	31.2	32.5	29.7	30.1	30.9	32.3	28.9	29.3	30.2	31.5	27.6	28.0	28.9	30.2	26.0	26.4	27.3	28.6	24.6	25.0	25.9	27.2
		S/T	1.00	0.92	0.79	0.7	1.00	0.93	0.80	0.7	1.00	1.00	0.82	0.7	1.00	1.00	0.84	0.7	1.00	1.00	0.86	0.7	1.00	1.00	1.00	0.8
		ΔT	30	28	24	21	29	28	24	21	30	28	25	21	29	28	24	21	29	27	24	21	30	29	25	22
		kW	1.71	1.71	1.70	1.72	1.88	1.88	1.88	1.89	2.07	2.07	2.07	2.08	2.28	2.28	2.28	2.29	2.52	2.52	2.51	2.53	2.79	2.79	2.79	2.80
		Amps	5.8	5.8	5.8	5.8	6.6	6.6	6.6	6.6	7.5	7.5	7.5	7.5	8.4	8.4	8.4	8.5	9.5	9.5	9.5	9.5	10.8	10.8	10.7	10.8
		Hi PR	240	241	242	246.4	277	278	280	283.6	316	317	319	322.6	358	359	361	364.6	403	404	406	409.9	451	452	454	458.2
		Lo PR	125	127	130	134.8	132	134	137	142.1	139	140	143	148.6	144	146	149	154.0	150	151	154	159.4	156	158	161	166.1
	1090	MBh	30.2	30.7	31.5	32.8	30.0	30.4	31.3	32.6	29.2	29.6	30.5	31.8	27.9	28.3	29.2	30.5	26.3	26.8	27.6	28.9	24.9	25.3	26.2	27.5
		S/T	1.00	0.95	0.82	0.7	1.00	0.95	0.82	0.7	1.00	1.00	0.85	0.7	1.00	1.00	0.87	0.7	1.00	1.00	0.89	0.7	1.00	1.00	1.00	0.8
		ΔT	29	27	24	20	29	27	24	20	29	27	24	21	29	27	24	20	29	27	23	20	30	28	25	21
		kW	1.71	1.71	1.71	1.7	1.89	1.89	1.88	1.9	2.08	2.08	2.08	2.1	2.29	2.29	2.29	2.3	2.52	2.52	2.52	2.5	2.80	2.80	2.79	2.8
		Amps	5.8	5.8	5.8	5.9	6.6	6.6	6.6	6.7	7.5	7.5	7.5	7.5	8.5	8.5	8.4	8.5	9.5	9.5	9.5	9.6	10.8	10.8	10.8	10.8
		Hi PR	241	242	244	247.8	278	279	281	285.0	317	318	320	324.0	359	360	362	366.0	404	406	407	411.3	453	454	455	459.6
		Lo PR	126	128	131	136.2	134	135	138	143.5	140	142	145	150.0	146	147	150	155.4	151	153	156	160.8	158	159	162	167.5

IDB: Entering Indoor Dry Bulb Temperature

High and low pressures are measured at the liquid and suction service valves.

Shaded area reflects AHRI conditions

Amps = outdoor unit amps (comp.+fan)

kW = Total system power

Expanded Cooling Data — GSXH503610**/CA*TA3626*4A*

			Outdoor Ambient Temperature																							
			65ºF				75ºF				85ºF				95ºF				105ºF				115ºF			
			Entering Indoor Wet Bulb Temperature																							
IDB	Airflow		59	63	67	71	59	63	67	71	59	63	67	71	59	63	67	71	59	63	67	71	59	63	67	71
70	990	MBh	34.8	35.3	36.3	-	34.4	34.9	36.0	-	33.5	34.0	35.1	-	32.0	32.5	33.5	-	30.1	30.6	31.6	-	28.3	28.8	29.9	-
		S/T	0.59	0.52	0.38	-	0.60	0.52	0.39	-	0.62	0.55	0.41	-	0.64	0.57	0.43	-	1.00	0.59	0.46	-	1.00	0.64	0.51	-
		ΔT	21	19	15	-	21	19	15	-	21	19	16	-	21	19	15	-	21	19	15	-	22	20	16	-
		kW	2.05	2.05	2.04	-	2.27	2.27	2.27	-	2.52	2.52	2.51	-	2.79	2.79	2.78	-	3.09	3.09	3.08	-	3.44	3.44	3.43	-
		Amps	7.1	7.1	7.0	-	8.1	8.1	8.1	-	9.2	9.2	9.2	-	10.5	10.4	10.4	-	11.8	11.8	11.8	-	13.4	13.4	13.4	-
		Hi PR	247	248	249	-	286	287	288	-	326	327	329	-	370	371	373	-	418	419	421	-	468	469	471	-
		Lo PR	121	123	126	-	129	130	133	-	135	137	140	-	141	142	145	-	146	148	151	-	153	154	157	-
	1145	MBh	35.3	35.7	36.8	-	34.9	35.4	36.5	-	34.0	34.5	35.6	-	32.5	33.0	**34.0**	-	30.6	31.0	32.1	-	28.8	29.3	30.3	-
		S/T	0.66	0.58	0.45	-	0.66	0.59	0.45	-	0.69	0.61	0.48	-	0.71	0.63	**0.50**	-	1.00	0.65	0.52	-	1.00	0.71	0.57	-
		ΔT	20	18	14	-	20	18	14	-	20	18	14	-	20	18	**14**	-	19	17	14	-	20	19	15	-
		kW	2.06	2.06	2.06	-	2.28	2.28	2.28	-	2.53	2.53	2.53	-	2.80	2.80	**2.79**	-	3.10	3.10	3.09	-	3.45	3.45	3.45	-
		Amps	7.1	7.1	7.1	-	8.1	8.1	8.1	-	9.3	9.3	9.3	-	10.5	10.5	**10.5**	-	11.9	11.9	11.9	-	13.5	13.5	13.5	-
		Hi PR	249	250	252	-	288	289	291	-	329	330	332	-	373	374	**375**	-	420	421	423	-	471	472	473	-
		Lo PR	123	125	128	-	131	132	135	-	137	139	142	-	143	144	**147**	-	148	149	153	-	155	156	159	-
	1320	MBh	35.9	36.4	37.5	-	35.6	36.1	37.2	-	34.7	35.2	36.2	-	33.2	33.6	34.7	-	31.2	31.7	32.8	-	29.5	30.0	31.0	-
		S/T	0.70	0.62	0.49	-	0.70	0.63	0.49	-	0.73	0.65	0.52	-	1.00	0.67	0.54	-	1.00	0.69	0.56	-	1.00	0.74	0.61	-
		ΔT	18	17	13	-	18	16	13	-	19	17	13	-	18	16	13	-	18	16	13	-	19	17	14	-
		kW	2.07	2.07	2.07	-	2.29	2.29	2.29	-	2.54	2.54	2.54	-	2.81	2.81	2.81	-	3.11	3.11	3.11	-	3.46	3.46	3.46	-
		Amps	7.2	7.2	7.2	-	8.2	8.2	8.2	-	9.3	9.3	9.3	-	10.6	10.6	10.5	-	11.9	11.9	11.9	-	13.6	13.5	13.5	-
		Hi PR	251	253	254	-	290	291	293	-	331	332	334	-	375	376	378	-	423	424	425	-	473	474	476	-
		Lo PR	126	127	130	-	133	135	138	-	140	141	144	-	145	147	150	-	150	152	155	-	157	159	162	-
75	990	MBh	34.8	35.3	36.3	37.9	34.5	35.0	36.0	37.6	33.6	34.1	35.1	36.7	32.0	32.5	33.5	35.1	30.1	30.6	31.6	33.2	28.3	28.8	29.9	31.5
		S/T	0.72	0.64	0.51	0.4	0.73	0.65	0.52	0.4	1.00	0.68	0.54	0.4	1.00	0.69	0.56	0.4	1.00	0.72	0.58	0.4	1.00	0.77	0.63	0.5
		ΔT	25	23	20	16	25	23	20	16	25	23	20	16	25	23	20	16	25	23	19	16	26	24	20	17
		kW	2.05	2.05	2.04	2.1	2.27	2.27	2.26	2.3	2.52	2.52	2.51	2.5	2.79	2.78	2.78	2.8	3.09	3.08	3.08	3.1	3.44	3.44	3.43	3.4
		Amps	7.1	7.1	7.0	7.1	8.1	8.1	8.1	8.1	9.2	9.2	9.2	9.3	10.5	10.4	10.4	10.5	11.8	11.8	11.8	11.9	13.4	13.4	13.4	13.5
		Hi PR	247	248	250	254.0	286	287	289	292.9	327	328	329	333.8	371	372	373	377.7	418	419	421	425.1	469	470	471	475.6
		Lo PR	121	123	126	131.1	129	130	133	138.5	135	137	140	145.0	141	142	145	150.4	146	148	151	155.8	153	154	157	162.5
	1145	MBh	35.3	35.8	36.8	38.4	35.0	35.5	36.5	38.1	34.1	34.5	35.6	37.2	32.5	**33.0**	34.0	35.6	30.6	31.1	32.1	33.7	28.8	29.3	30.4	32.0
		S/T	0.79	0.71	0.58	0.4	0.79	0.72	0.58	0.4	1.00	0.74	0.61	0.5	1.00	**0.76**	0.63	0.5	1.00	0.78	0.65	0.5	1.00	1.00	0.70	0.6
		ΔT	24	22	18	15	24	22	18	15	24	22	19	15	24	**22**	18	15	23	22	18	14	25	23	19	15
		kW	2.06	2.06	2.05	2.07	2.28	2.28	2.28	2.29	2.53	2.53	2.52	2.54	2.80	**2.80**	2.79	2.81	3.10	3.10	3.09	3.11	3.45	3.45	3.45	3.46
		Amps	7.1	7.1	7.1	7.2	8.1	8.1	8.1	8.2	9.3	9.3	9.3	9.3	10.5	**10.5**	10.5	10.6	11.9	11.9	11.9	11.9	13.5	13.5	13.5	13.5
		Hi PR	249	250	252	256.3	288	289	291	295.2	329	330	332	336.0	373	**374**	376	380.0	420	421	423	427.3	471	472	474	477.9
		Lo PR	123	125	128	133.0	131	132	135	140.4	137	139	142	146.9	143	**144**	147	152.4	148	149	153	157.7	155	156	159	164.5
	1320	MBh	36.0	36.4	37.5	39.1	35.6	36.1	37.2	38.8	34.7	35.2	36.3	37.9	33.2	33.7	34.7	36.3	31.3	31.8	32.8	34.4	29.5	30.0	31.1	32.6
		S/T	0.82	0.75	0.61	0.5	0.83	0.75	0.62	0.5	1.00	0.78	0.64	0.5	1.00	0.80	0.66	0.5	1.00	0.82	0.69	0.5	1.00	1.00	0.74	0.6
		ΔT	23	21	17	13	23	21	17	13	23	21	17	14	23	21	17	13	22	20	17	13	24	22	18	14
		kW	2.07	2.07	2.07	2.1	2.29	2.29	2.29	2.3	2.54	2.54	2.54	2.6	2.81	2.81	2.80	2.8	3.11	3.11	3.10	3.1	3.46	3.46	3.46	3.5
		Amps	7.2	7.2	7.2	7.2	8.2	8.2	8.2	8.2	9.3	9.3	9.3	9.4	10.6	10.6	10.5	10.6	11.9	11.9	11.9	12.0	13.5	13.5	13.5	13.6
		Hi PR	252	253	254	258.8	291	292	293	297.7	331	332	334	338.5	375	376	378	382.5	423	424	426	429.8	473	474	476	480.4
		Lo PR	126	127	130	135.5	133	135	138	142.9	140	141	144	149.3	145	147	150	154.8	150	152	155	160.2	157	159	162	166.9

IDB: Entering Indoor Dry Bulb Temperature
High and low pressures are measured at the liquid and suction service valves.

Shaded area reflects ACCA (TVA) conditions

MBH = Net Total Capacity (1000 Btu/hr)
S/T = Sensible To Total Capacity Ratio

HI PR = Pressure at liquid service valve, psig
LO PR = Pressure at vapor service valve, psig

Amps = outdoor unit amps (comp.+fan)
kW = Total system power

Expanded Cooling Data — GSXH503610**/CA*TA3626*4A* (cont.)

			Outdoor Ambient Temperature																							
			65ºF				75ºF				85ºF				95ºF				105ºF				115ºF			
			Entering Indoor Wet Bulb Temperature																							
IDB	Airflow		59	63	67	71	59	63	67	71	59	63	67	71	59	63	67	71	59	63	67	71	59	63	67	71
80	990	MBh	35.0	35.5	36.5	38.1	34.6	35.1	36.2	37.8	33.7	34.2	35.3	36.9	32.2	32.7	33.7	35.3	30.3	30.8	31.8	33.4	28.5	29.0	30.1	31.6
		S/T	0.84	0.77	0.63	0.5	1.00	0.77	0.64	0.5	1.00	0.80	0.67	0.5	1.00	0.82	0.68	0.5	1.00	1.00	0.71	0.6	1.00	1.00	0.76	0.6
		ΔT	29	27	24	20	29	27	24	20	30	28	24	20	29	27	24	20	29	27	24	20	30	28	25	21
		kW	2.05	2.05	2.04	2.1	2.27	2.27	2.26	2.3	2.52	2.52	2.51	2.5	2.79	2.79	2.78	2.8	3.09	3.09	3.08	3.1	3.44	3.44	3.43	3.5
		Amps	7.1	7.1	7.0	7.1	8.1	8.1	8.1	8.1	9.2	9.2	9.2	9.3	10.5	10.4	10.4	10.5	11.8	11.8	11.8	11.9	13.4	13.4	13.4	13.5
		Hi PR	247	248	250	254.4	286	287	289	293.4	327	328	330	334.2	371	372	374	378.1	418	419	421	425.5	469	470	472	476.1
		Lo PR	122	123	126	131.6	129	131	134	139.0	136	137	140	145.5	141	143	146	151.0	147	148	151	156.3	153	155	158	163.1
	1145	MBh	35.5	35.9	37.0	38.6	35.1	35.6	36.7	38.3	34.2	34.7	35.8	37.4	32.7	33.2	**34.2**	35.8	30.8	31.2	32.3	33.9	29.0	29.5	30.5	32.1
		S/T	1.00	0.83	0.70	0.6	1.00	0.84	0.71	0.6	1.00	0.86	0.73	0.6	1.00	0.88	**0.75**	0.6	1.00	1.00	0.77	0.6	1.00	1.00	0.82	0.7
		ΔT	28	26	23	19	28	26	23	19	28	26	23	19	28	26	**22**	19	28	26	22	19	29	27	23	20
		kW	2.06	2.06	2.05	2.07	2.28	2.28	2.28	2.29	2.53	2.53	2.53	2.54	2.80	2.80	**2.79**	2.81	3.10	3.10	3.09	3.11	3.45	3.45	3.45	3.46
		Amps	7.1	7.1	7.1	7.2	8.1	8.1	8.1	8.2	9.3	9.3	9.3	9.3	10.5	10.5	**10.5**	10.6	11.9	11.9	11.9	11.9	13.5	13.5	13.5	13.6
		Hi PR	250	251	252	256.7	289	290	291	295.7	329	330	332	336.5	373	374	**376**	380.4	421	422	423	427.8	471	472	474	478.4
		Lo PR	124	125	128	133.6	131	133	136	141.0	138	139	142	147.4	143	145	**148**	152.9	149	150	153	158.3	155	157	160	165.0
	1320	MBh	36.1	36.6	37.7	39.3	35.8	36.3	37.4	38.9	34.9	35.4	36.4	38.0	33.4	33.8	34.9	36.5	31.4	31.9	33.0	34.6	29.7	30.2	31.2	32.8
		S/T	1.00	0.87	0.74	0.6	1.00	0.88	0.74	0.6	1.00	0.90	0.77	0.6	1.00	1.00	0.79	0.6	1.00	1.00	0.81	0.7	1.00	1.00	0.86	0.7
		ΔT	27	25	21	18	27	25	21	18	27	25	22	18	27	25	21	18	27	25	21	17	28	26	22	19
		kW	2.07	2.07	2.07	2.1	2.29	2.29	2.29	2.3	2.54	2.54	2.54	2.6	2.81	2.81	2.81	2.8	3.11	3.11	3.11	3.1	3.46	3.46	3.46	3.5
		Amps	7.2	7.2	7.2	7.2	8.2	8.2	8.2	8.3	9.3	9.3	9.3	9.4	10.6	10.6	10.5	10.6	11.9	11.9	11.9	12.0	13.6	13.5	13.5	13.6
		Hi PR	252	253	255	259.2	291	292	294	298.2	332	333	335	339.0	376	377	379	382.9	423	424	426	430.3	474	475	477	480.9
		Lo PR	126	128	131	136.0	134	135	138	143.4	140	142	145	149.9	146	147	150	155.3	151	152	156	160.7	158	159	162	167.4
85	990	MBh	35.5	36.0	37.1	38.7	35.2	35.7	36.8	38.4	34.3	34.8	35.9	37.4	32.8	33.3	34.3	35.9	30.9	31.3	32.4	34.0	29.1	29.6	30.6	32.2
		S/T	1.00	0.87	0.73	0.6	1.00	0.87	0.74	0.6	1.00	1.00	0.77	0.6	1.00	1.00	0.78	0.6	1.00	1.00	0.81	0.7	1.00	1.00	1.00	0.7
		ΔT	33	31	28	24	33	31	28	24	33	31	28	24	33	31	28	24	33	31	27	24	34	32	28	25
		kW	2.05	2.05	2.05	2.1	2.27	2.27	2.27	2.3	2.52	2.52	2.52	2.5	2.79	2.79	2.79	2.8	3.09	3.09	3.09	3.1	3.44	3.44	3.44	3.5
		Amps	7.1	7.1	7.1	7.1	8.1	8.1	8.1	8.2	9.2	9.2	9.2	9.3	10.5	10.5	10.5	10.5	11.8	11.8	11.8	11.9	13.5	13.5	13.4	13.5
		Hi PR	248	250	251	255.6	287	289	290	294.6	328	329	331	335.4	372	373	375	379.3	420	421	422	426.7	470	471	473	477.2
		Lo PR	124	125	128	133.5	131	133	136	140.8	138	139	142	147.3	143	145	148	152.8	148	150	153	158.2	155	157	160	164.9
	1145	MBh	36.0	36.5	37.6	39.2	35.7	36.2	37.3	38.8	34.8	35.3	36.3	37.9	33.3	33.7	34.8	36.4	31.3	31.8	32.9	34.5	29.6	30.1	31.1	32.7
		S/T	1.00	0.93	0.80	0.7	1.00	0.94	0.81	0.7	1.00	1.00	0.83	0.7	1.00	1.00	0.85	0.7	1.00	1.00	0.87	0.7	1.00	1.00	1.00	0.8
		ΔT	32	30	26	23	32	30	26	23	32	30	27	23	32	30	26	23	32	30	26	22	33	31	27	23
		kW	2.06	2.06	2.06	2.08	2.29	2.29	2.28	2.30	2.54	2.53	2.53	2.55	2.80	2.80	2.80	2.82	3.10	3.10	3.10	3.12	3.46	3.45	3.45	3.47
		Amps	7.2	7.1	7.1	7.2	8.2	8.2	8.1	8.2	9.3	9.3	9.3	9.4	10.5	10.5	10.5	10.6	11.9	11.9	11.9	12.0	13.5	13.5	13.5	13.6
		Hi PR	251	252	254	257.9	290	291	293	296.8	331	332	333	337.6	374	376	377	381.6	422	423	425	429.0	472	473	475	479.5
		Lo PR	126	127	130	135.4	133	135	138	142.8	139	141	144	149.2	145	146	150	154.7	150	152	155	160.1	157	159	162	166.8
	1320	MBh	36.7	37.2	38.3	39.8	36.4	36.9	37.9	39.5	35.5	36.0	37.0	38.6	33.9	34.4	35.5	37.1	32.0	32.5	33.6	35.1	30.3	30.8	31.8	33.4
		S/T	1.00	0.97	0.84	0.7	1.00	1.00	0.84	0.7	1.00	1.00	0.87	0.7	1.00	1.00	0.89	0.7	1.00	1.00	0.91	0.8	1.00	1.00	1.00	0.8
		ΔT	31	29	25	21	31	29	25	21	31	29	25	22	31	29	25	21	30	28	25	21	32	30	26	22
		kW	2.08	2.07	2.07	2.1	2.30	2.30	2.29	2.3	2.55	2.55	2.54	2.6	2.82	2.81	2.81	2.8	3.12	3.11	3.11	3.1	3.47	3.47	3.46	3.5
		Amps	7.2	7.2	7.2	7.3	8.2	8.2	8.2	8.3	9.4	9.3	9.3	9.4	10.6	10.6	10.6	10.6	12.0	12.0	11.9	12.0	13.6	13.6	13.5	13.6
		Hi PR	253	254	256	260.4	292	293	295	299.3	333	334	336	340.1	377	378	380	384.1	424	425	427	431.5	475	476	478	482.0
		Lo PR	128	130	133	137.8	135	137	140	145.2	142	143	147	151.7	147	149	152	157.2	153	154	157	162.5	159	161	164	169.3

IDB: Entering Indoor Dry Bulb Temperature
High and low pressures are measured at the liquid and suction service valves.

Shaded area reflects AHRI conditions

MBh = Net Total Capacity (1000 Btu/hr)
S/T = Sensible To Total Capacity Ratio

HI PR = Pressure at liquid service valve, psig
LO PR = Pressure at vapor service valve, psig

Amps = outdoor unit amps (comp.+fan)
kW = Total system power

Expanded Cooling Data — GSXH504210**/CA*TA4230*4A*

			Outdoor Ambient Temperature																							
			65ºF				75ºF				85ºF				95ºF				105ºF				115ºF			
			Entering Indoor Wet Bulb Temperature																							
IDB	Airflow		59	63	67	71	59	63	67	71	59	63	67	71	59	63	67	71	59	63	67	71	59	63	67	71
70	1220	MBh	40.7	41.3	42.5	-	40.3	40.9	42.1	-	39.3	39.8	41.0	-	37.4	38.0	39.2	-	35.2	35.8	37.0	-	33.2	33.7	34.9	-
		S/T	0.61	0.54	0.40	-	0.62	0.54	0.40	-	0.64	0.57	0.43	-	0.66	0.59	0.45	-	0.69	0.61	0.47	-	1.00	0.66	0.52	-
		ΔT	19	18	14	-	19	18	14	-	20	18	14	-	19	18	14	-	19	17	14	-	20	18	15	-
		kW	2.38	2.38	2.38	-	2.63	2.63	2.63	-	2.91	2.91	2.91	-	3.22	3.21	3.21	-	3.55	3.55	3.55	-	3.95	3.95	3.94	-
		Amps	8.1	8.1	8.1	-	9.2	9.2	9.2	-	10.5	10.5	10.5	-	11.9	11.9	11.9	-	13.4	13.4	13.4	-	15.3	15.2	15.2	-
		Hi PR	237	238	239	-	274	275	277	-	313	314	316	-	355	356	358	-	401	402	403	-	449	450	452	-
		Lo PR	119	120	123	-	126	128	131	-	132	134	137	-	138	139	142	-	143	144	147	-	150	151	154	-
	1400	MBh	41.2	41.8	43.0	-	40.9	41.4	42.7	-	39.8	40.4	41.6	-	38.0	38.5	39.8	-	35.7	36.3	37.5	-	33.7	34.3	35.5	-
		S/T	0.68	0.60	0.46	-	0.68	0.60	0.47	-	0.71	0.63	0.49	-	0.73	0.65	0.51	-	1.00	0.67	0.53	-	1.00	0.72	0.59	-
		ΔT	18	16	13	-	18	16	13	-	18	17	13	-	18	16	13	-	18	16	13	-	19	17	14	-
		kW	2.40	2.40	2.39	-	2.65	2.65	2.64	-	2.93	2.92	2.92	-	3.23	3.23	3.22	-	3.57	3.57	3.56	-	3.96	3.96	3.96	-
		Amps	8.1	8.1	8.1	-	9.3	9.3	9.3	-	10.6	10.6	10.5	-	12.0	11.9	11.9	-	13.5	13.5	13.5	-	15.3	15.3	15.3	-
		Hi PR	239	240	241	-	276	277	279	-	315	316	318	-	357	358	360	-	403	404	405	-	451	452	454	-
		Lo PR	121	122	125	-	128	129	132	-	134	136	139	-	140	141	144	-	145	146	149	-	151	153	156	-
	1530	MBh	41.7	42.3	43.5	-	41.3	41.9	43.1	-	40.3	40.8	42.1	-	38.4	39.0	40.2	-	36.2	36.8	38.0	-	34.2	34.7	36.0	-
		S/T	0.70	0.63	0.49	-	0.71	0.63	0.49	-	0.73	0.66	0.52	-	0.75	0.68	0.54	-	1.00	0.70	0.56	-	1.00	0.75	0.61	-
		ΔT	18	16	12	-	18	16	12	-	18	16	13	-	17	16	12	-	17	15	12	-	18	17	13	-
		kW	2.41	2.40	2.40	-	2.66	2.65	2.65	-	2.94	2.93	2.93	-	3.24	3.24	3.23	-	3.58	3.57	3.57	-	3.97	3.97	3.97	-
		Amps	8.2	8.2	8.2	-	9.3	9.3	9.3	-	10.6	10.6	10.6	-	12.0	12.0	12.0	-	13.5	13.5	13.5	-	15.4	15.3	15.3	-
		Hi PR	240	241	243	-	277	278	280	-	317	318	319	-	359	360	361	-	404	405	407	-	453	454	455	-
		Lo PR	122	123	127	-	129	131	134	-	136	137	140	-	141	142	145	-	146	148	151	-	153	154	157	-
75	1220	MBh	40.7	41.3	42.5	44.4	40.3	40.9	42.1	44.0	39.3	39.9	41.1	42.9	37.4	**38.0**	39.2	41.1	35.2	35.8	37.0	38.9	33.2	33.8	35.0	36.8
		S/T	0.74	0.67	0.53	0.4	0.75	0.67	0.53	0.4	0.77	0.70	0.56	0.4	1.00	**0.72**	0.58	0.4	1.00	0.74	0.60	0.5	1.00	0.79	0.65	0.5
		ΔT	23	22	18	15	23	21	18	15	23	22	18	15	23	**21**	18	15	23	21	18	14	24	22	19	16
		kW	2.38	2.38	2.38	2.4	2.63	2.63	2.63	2.6	2.91	2.91	2.91	2.9	3.21	**3.21**	3.21	3.2	3.55	3.55	3.55	3.6	3.95	3.95	3.94	4.0
		Amps	8.1	8.1	8.0	8.1	9.2	9.2	9.2	9.3	10.5	10.5	10.5	10.6	11.9	**11.9**	11.9	11.9	13.4	13.4	13.4	13.5	15.2	15.2	15.2	15.3
		Hi PR	237	238	239	243.6	274	275	277	280.9	313	314	316	320.0	355	**356**	358	362.1	401	402	403	407.6	449	450	452	456.0
		Lo PR	119	120	123	128.4	126	128	131	135.6	132	134	137	142.0	138	**139**	142	147.3	143	144	148	152.6	150	151	154	159.2
	1400	MBh	41.3	41.8	43.0	44.9	40.9	41.5	42.7	44.5	39.8	40.4	41.6	43.5	38.0	**38.6**	39.8	41.6	35.8	36.3	37.6	39.4	33.7	34.3	35.5	37.4
		S/T	0.81	0.73	0.59	0.4	0.81	0.74	0.60	0.5	1.00	0.76	0.62	0.5	1.00	**0.78**	0.64	0.5	1.00	0.80	0.67	0.5	1.00	0.86	0.72	0.6
		ΔT	22	20	17	14	22	20	17	14	22	21	17	14	22	**20**	17	14	22	20	17	13	23	21	18	14
		kW	2.40	2.39	2.39	2.41	2.65	2.64	2.64	2.66	2.93	2.92	2.92	2.94	3.23	**3.23**	3.22	3.24	3.57	3.56	3.56	3.58	3.96	3.96	3.96	3.97
		Amps	8.1	8.1	8.1	8.2	9.3	9.3	9.3	9.3	10.6	10.6	10.5	10.6	11.9	**11.9**	11.9	12.0	13.5	13.5	13.5	13.6	15.3	15.3	15.3	15.4
		Hi PR	239	240	242	245.6	276	277	279	283.0	315	316	318	322.1	357	**358**	360	364.2	403	404	406	409.6	451	452	454	458.1
		Lo PR	121	122	125	130.2	128	129	132	137.4	134	136	139	143.8	140	**141**	144	149.1	145	146	149	154.4	151	153	156	160.9
	1530	MBh	41.7	42.3	43.5	45.4	41.4	41.9	43.1	45.0	40.3	40.9	42.1	43.9	38.5	**39.0**	40.3	42.1	36.2	36.8	38.0	39.9	34.2	34.8	36.0	37.8
		S/T	0.83	0.76	0.62	0.5	0.84	0.76	0.63	0.5	1.00	0.79	0.65	0.5	1.00	**0.81**	0.67	0.5	1.00	0.83	0.69	0.5	1.00	0.88	0.75	0.6
		ΔT	21	20	16	13	21	20	16	13	22	20	17	13	21	**20**	16	13	21	19	16	13	22	21	17	14
		kW	2.40	2.40	2.40	2.4	2.65	2.65	2.65	2.7	2.93	2.93	2.93	2.9	3.24	**3.23**	3.23	3.2	3.57	3.57	3.57	3.6	3.97	3.97	3.96	4.0
		Amps	8.2	8.2	8.1	8.2	9.3	9.3	9.3	9.4	10.6	10.6	10.6	10.7	12.0	**12.0**	12.0	12.0	13.5	13.5	13.5	13.6	15.3	15.3	15.3	15.4
		Hi PR	240	241	243	247.1	278	279	280	284.4	317	318	319	323.5	359	**360**	362	365.7	404	405	407	411.1	453	454	455	459.5
		Lo PR	122	124	127	131.6	129	131	134	138.8	136	137	140	145.2	141	**142**	145	150.5	146	148	151	155.8	153	154	157	162.4

IDB: Entering Indoor Dry Bulb Temperature

Shaded area reflects ACCA (TVA) conditions

Amps = outdoor unit amps (comp.+fan)

High and low pressures are measured at the liquid and suction service valves.

kW = Total system power

Expanded Cooling Data — GSXH504210**/CA*TA4230*4A*

			Outdoor Ambient Temperature																							
			65ºF				75ºF				85ºF				95ºF				105ºF				115ºF			
			Entering Indoor Wet Bulb Temperature																							
IDB	Airflow		59	63	67	71	59	63	67	71	59	63	67	71	59	63	67	71	59	63	67	71	59	63	67	71
80	1220	MBh	40.9	41.5	42.7	44.6	40.6	41.1	42.3	44.2	39.5	40.1	41.3	43.1	37.7	38.2	39.5	41.3	35.4	36.0	37.2	39.1	33.4	34.0	35.2	37.0
		S/T	0.87	0.79	0.66	0.5	1.00	0.80	0.66	0.5	1.00	0.82	0.69	0.5	1.00	0.84	0.71	0.6	1.00	0.87	0.73	0.6	1.00	1.00	0.78	0.6
		ΔT	27	25	22	19	27	25	22	19	27	26	22	19	27	25	22	19	27	25	22	18	28	26	23	19
		kW	2.38	2.38	2.38	2.4	2.63	2.63	2.63	2.6	2.91	2.91	2.91	2.9	3.22	3.21	3.21	3.2	3.55	3.55	3.55	3.6	3.95	3.95	3.94	4.0
		Amps	8.1	8.1	8.1	8.1	9.2	9.2	9.2	9.3	10.5	10.5	10.5	10.6	11.9	11.9	11.9	11.9	13.4	13.4	13.4	13.5	15.3	15.2	15.2	15.3
		Hi PR	237	238	240	244.0	275	276	277	281.3	314	315	316	320.5	356	357	358	362.6	401	402	404	408.0	450	451	452	456.5
		Lo PR	119	121	124	128.9	127	128	131	136.2	133	134	137	142.5	138	140	143	147.8	144	145	148	153.1	150	152	155	159.7
	1400	MBh	41.5	42.0	43.3	45.1	41.1	41.7	42.9	44.7	40.0	40.6	41.8	43.7	38.2	38.8	**40.0**	41.9	36.0	36.5	37.8	39.6	33.9	34.5	35.7	37.6
		S/T	0.93	0.86	0.72	0.6	1.00	0.86	0.73	0.6	1.00	0.89	0.75	0.6	1.00	0.91	**0.77**	0.6	1.00	1.00	0.79	0.6	1.00	1.00	0.84	0.7
		ΔT	26	24	21	18	26	24	21	18	26	25	21	18	26	24	**21**	17	26	24	21	17	27	25	22	18
		kW	2.40	2.39	2.39	2.41	2.65	2.65	2.64	2.66	2.93	2.92	2.92	2.94	3.23	3.23	**3.22**	3.24	3.57	3.56	3.56	3.58	3.96	3.96	3.96	3.98
		Amps	8.1	8.1	8.1	8.2	9.3	9.3	9.3	9.3	10.6	10.6	10.5	10.6	12.0	11.9	**11.9**	12.0	13.5	13.5	13.5	13.6	15.3	15.3	15.3	15.4
		Hi PR	239	240	242	246.1	277	278	279	283.4	316	317	318	322.5	358	359	**361**	364.7	403	404	406	410.1	452	453	454	458.5
		Lo PR	121	123	126	130.7	128	130	133	138.0	135	136	139	144.3	140	142	**145**	149.6	145	147	150	154.9	152	153	156	161.5
	1530	MBh	41.9	42.5	43.7	45.6	41.6	42.1	43.4	45.2	40.5	41.1	42.3	44.2	38.7	39.2	40.5	42.3	36.4	37.0	38.2	40.1	34.4	35.0	36.2	38.0
		S/T	1.00	0.88	0.75	0.6	1.00	0.89	0.75	0.6	1.00	0.92	0.78	0.6	1.00	0.94	0.80	0.7	1.00	1.00	0.82	0.7	1.00	1.00	0.87	0.7
		ΔT	25	24	20	17	25	24	20	17	26	24	21	17	25	24	20	17	25	23	20	17	26	24	21	18
		kW	2.41	2.40	2.40	2.4	2.66	2.65	2.65	2.7	2.93	2.93	2.93	2.9	3.24	3.24	3.23	3.2	3.57	3.57	3.57	3.6	3.97	3.97	3.97	4.0
		Amps	8.2	8.2	8.2	8.2	9.3	9.3	9.3	9.4	10.6	10.6	10.6	10.7	12.0	12.0	12.0	12.0	13.5	13.5	13.5	13.6	15.3	15.3	15.3	15.4
		Hi PR	241	242	243	247.5	278	279	281	284.9	317	318	320	324.0	359	360	362	366.1	405	406	407	411.5	453	454	456	460.0
		Lo PR	123	124	127	132.1	130	131	134	139.4	136	138	141	145.7	141	143	146	151.1	147	148	151	156.3	153	155	158	162.9
85	1220	MBh	41.6	42.2	43.4	45.2	41.2	41.8	43.0	44.9	40.2	40.7	42.0	43.8	38.3	38.9	40.1	42.0	36.1	36.7	37.9	39.8	34.1	34.6	35.9	37.7
		S/T	1.00	0.90	0.76	0.6	1.00	0.90	0.76	0.6	1.00	1.00	0.79	0.6	1.00	1.00	0.81	0.7	1.00	1.00	0.83	0.7	1.00	1.00	0.88	0.7
		ΔT	31	29	26	22	31	29	26	22	31	29	26	22	31	29	26	22	30	29	25	22	32	30	26	23
		kW	2.39	2.39	2.38	2.4	2.64	2.64	2.63	2.7	2.92	2.92	2.91	2.9	3.22	3.22	3.21	3.2	3.56	3.56	3.55	3.6	3.95	3.95	3.95	4.0
		Amps	8.1	8.1	8.1	8.2	9.2	9.2	9.2	9.3	10.5	10.5	10.5	10.6	11.9	11.9	11.9	12.0	13.5	13.4	13.4	13.5	15.3	15.3	15.2	15.3
		Hi PR	238	239	241	245.1	276	277	278	282.5	315	316	317	321.6	357	358	360	363.7	402	403	405	409.1	451	452	453	457.6
		Lo PR	121	123	126	130.7	128	130	133	137.9	135	136	139	144.3	140	142	145	149.6	145	147	150	154.9	152	153	156	161.5
	1400	MBh	42.2	42.7	43.9	45.8	41.8	42.4	43.6	45.4	40.7	41.3	42.5	44.4	38.9	39.5	40.7	42.5	36.7	37.2	38.5	40.3	34.6	35.2	36.4	38.3
		S/T	1.00	0.96	0.82	0.7	1.00	0.97	0.83	0.7	1.00	1.00	0.85	0.7	1.00	1.00	0.87	0.7	1.00	1.00	0.90	0.8	1.00	1.00	0.95	0.8
		ΔT	30	28	25	21	30	28	24	21	30	28	25	21	30	28	24	21	29	28	24	21	30	29	25	22
		kW	2.40	2.40	2.40	2.41	2.65	2.65	2.65	2.66	2.93	2.93	2.93	2.94	3.23	3.23	3.23	3.25	3.57	3.57	3.57	3.58	3.97	3.97	3.96	3.98
		Amps	8.2	8.2	8.1	8.2	9.3	9.3	9.3	9.4	10.6	10.6	10.6	10.6	12.0	12.0	11.9	12.0	13.5	13.5	13.5	13.6	15.3	15.3	15.3	15.4
		Hi PR	240	241	243	247.2	278	279	280	284.5	317	318	320	323.6	359	360	362	365.8	404	405	407	411.2	453	454	456	459.6
		Lo PR	123	124	127	132.5	130	132	135	139.7	137	138	141	146.1	142	143	146	151.4	147	149	152	156.7	154	155	158	163.3
	1530	MBh	42.6	43.2	44.4	46.3	42.3	42.8	44.0	45.9	41.2	41.8	43.0	44.8	39.4	39.9	41.2	43.0	37.1	37.7	38.9	40.8	35.1	35.7	36.9	38.7
		S/T	1.00	0.99	0.85	0.7	1.00	0.99	0.86	0.7	1.00	1.00	0.88	0.7	1.00	1.00	0.90	0.8	1.00	1.00	0.92	0.8	1.00	1.00	1.00	0.8
		ΔT	29	27	24	20	29	27	24	20	29	27	24	21	29	27	24	20	29	27	24	20	30	28	25	21
		kW	2.41	2.41	2.40	2.4	2.66	2.66	2.65	2.7	2.94	2.94	2.93	3.0	3.24	3.24	3.24	3.3	3.58	3.58	3.57	3.6	3.98	3.97	3.97	4.0
		Amps	8.2	8.2	8.2	8.3	9.3	9.3	9.3	9.4	10.6	10.6	10.6	10.7	12.0	12.0	12.0	12.1	13.6	13.5	13.5	13.6	15.4	15.4	15.3	15.4
		Hi PR	242	243	245	248.6	279	280	282	286.0	318	319	321	325.1	360	361	363	367.2	406	407	409	412.6	454	455	457	461.1
		Lo PR	124	126	129	133.9	132	133	136	141.1	138	139	142	147.5	143	145	148	152.8	149	150	153	158.1	155	157	160	164.7

IDB: Entering Indoor Dry Bulb Temperature

Shaded area reflects AHRI conditions

Amps = outdoor unit amps (comp.+fan)

High and low pressures are measured at the liquid and suction service valves.

kW = Total system power

Expanded Cooling Data — GSXH504810**/CA*T4961*4A*

			Outdoor Ambient Temperature																							
			65ºF				75ºF				85ºF				95ºF				105ºF				115ºF			
			Entering Indoor Wet Bulb Temperature																							
IDB	Airflow		59	63	67	71	59	63	67	71	59	63	67	71	59	63	67	71	59	63	67	71	59	63	67	71
70	1390	MBh	46.7	47.3	48.7	-	46.2	46.9	48.3	-	45.0	45.7	47.1	-	43.0	43.6	45.0	-	40.4	41.1	42.4	-	38.1	38.7	40.1	---
		S/T	0.63	0.56	0.42	-	0.64	0.56	0.43	-	0.66	0.59	0.45	-	0.68	0.61	0.47	-	1.00	0.63	0.49	-	1.00	0.68	0.54	---
		ΔT	21	19	15	-	21	19	15	-	21	19	15	-	21	19	15	-	20	18	15	-	22	20	16	---
		kW	2.68	2.68	2.68	-	2.98	2.97	2.97	-	3.31	3.30	3.30	-	3.66	3.66	3.65	-	4.06	4.05	4.05	-	4.52	4.52	4.52	---
		Amps	9.3	9.3	9.3	-	10.7	10.7	10.6	-	12.2	12.2	12.2	-	13.8	13.8	13.8	-	15.6	15.6	15.6	-	17.8	17.7	17.7	---
		Hi PR	241	242	244	-	279	280	282	-	319	320	322	-	362	363	365	-	408	409	411	-	457	458	460	---
		Lo PR	120	121	124	-	127	128	131	-	133	135	138	-	138	140	143	-	144	145	148	-	150	152	155	---
	1450	MBh	46.9	47.5	48.9	-	46.4	47.1	48.5	-	45.2	45.9	47.3	-	43.2	43.8	45.2	-	40.6	41.3	42.7	-	38.3	39.0	40.3	---
		S/T	0.65	0.57	0.44	-	0.65	0.58	0.45	-	0.68	0.60	0.47	-	0.70	0.62	0.49	-	1.00	0.64	0.51	-	1.00	0.69	0.56	---
		ΔT	20	18	15	-	20	18	15	-	21	19	15	-	20	18	15	-	20	18	14	-	21	19	16	---
		kW	2.69	2.69	2.68	-	2.98	2.98	2.97	-	3.31	3.31	3.30	-	3.67	3.66	3.66	-	4.06	4.06	4.05	-	4.53	4.53	4.52	---
		Amps	9.4	9.3	9.3	-	10.7	10.7	10.7	-	12.2	12.2	12.2	-	13.8	13.8	13.8	-	15.6	15.6	15.6	-	17.8	17.8	17.7	---
		Hi PR	242	243	245	-	280	281	283	-	320	321	322	-	362	364	365	-	409	410	411	-	458	459	460	---
		Lo PR	120	122	125	-	127	129	132	-	134	135	138	-	139	141	144	-	144	146	149	-	151	152	155	---
	1580	MBh	47.4	48.0	49.4	-	46.9	47.6	49.0	-	45.7	46.4	47.8	-	43.7	44.3	45.7	-	41.1	41.8	43.2	-	38.8	39.5	40.8	---
		S/T	0.67	0.60	0.47	-	0.68	0.61	0.47	-	0.70	0.63	0.50	-	0.72	0.65	0.52	-	1.00	0.67	0.54	-	1.00	0.72	0.59	---
		ΔT	20	18	14	-	20	18	14	-	20	18	14	-	19	18	14	-	19	17	14	-	20	18	15	---
		kW	2.70	2.69	2.69	-	2.99	2.99	2.98	-	3.32	3.32	3.31	-	3.67	3.67	3.67	-	4.07	4.07	4.06	-	4.54	4.53	4.53	---
		Amps	9.4	9.4	9.4	-	10.7	10.7	10.7	-	12.2	12.2	12.2	-	13.9	13.9	13.8	-	15.7	15.7	15.7	-	17.8	17.8	17.8	---
		Hi PR	244	245	246	-	281	282	284	-	321	322	324	-	364	365	367	-	410	411	413	-	459	460	462	---
		Lo PR	122	123	126	-	129	130	133	-	135	137	140	-	140	142	145	-	146	147	150	-	152	154	157	---
75	1390	MBh	46.7	47.3	48.7	50.8	46.3	46.9	48.3	50.4	45.1	45.7	47.1	49.2	43.0	43.6	45.0	47.1	40.4	41.1	42.5	44.6	38.1	38.8	40.2	42.3
		S/T	0.76	0.68	0.55	0.4	0.76	0.69	0.56	0.4	1.00	0.71	0.58	0.4	1.00	0.73	0.60	0.5	1.00	0.75	0.62	0.5	1.00	0.80	0.67	0.5
		ΔT	25	23	19	16	25	23	19	15	25	23	20	16	25	23	19	15	25	23	19	15	26	24	20	16
		kW	2.68	2.68	2.67	2.7	2.98	2.97	2.97	3.0	3.30	3.30	3.30	3.3	3.66	3.66	3.65	3.7	4.06	4.05	4.05	4.1	4.52	4.52	4.51	4.5
		Amps	9.3	9.3	9.3	9.4	10.7	10.7	10.6	10.7	12.2	12.2	12.1	12.2	13.8	13.8	13.8	13.9	15.6	15.6	15.6	15.7	17.7	17.7	17.7	17.8
		Hi PR	242	243	244	248.6	280	281	282	286.5	319	320	322	326.2	362	363	365	368.9	408	409	411	415.0	457	458	460	464.2
		Lo PR	120	121	124	129.2	127	128	131	136.4	133	135	138	142.7	139	140	143	148.0	144	145	148	153.3	150	152	155	159.9
	1450	MBh	46.9	47.5	48.9	51.0	46.5	47.1	48.5	50.6	45.3	45.9	47.3	49.4	43.2	**43.8**	45.2	47.3	40.6	41.3	42.7	44.8	38.3	39.0	40.4	42.5
		S/T	0.77	0.70	0.57	0.4	0.78	0.70	0.57	0.4	1.00	0.73	0.60	0.5	1.00	**0.75**	0.62	0.5	1.00	0.77	0.64	0.5	1.00	0.82	0.69	0.5
		ΔT	25	23	19	15	25	23	19	15	25	23	19	15	25	**23**	19	15	24	22	19	15	26	24	20	16
		kW	2.69	2.68	2.68	2.70	2.98	2.98	2.97	2.99	3.31	3.31	3.30	3.32	3.66	**3.66**	3.66	3.68	4.06	4.06	4.05	4.08	4.53	4.52	4.52	4.54
		Amps	9.3	9.3	9.3	9.4	10.7	10.7	10.7	10.8	12.2	12.2	12.2	12.3	13.8	**13.8**	13.8	13.9	15.6	15.6	15.6	15.7	17.8	17.8	17.7	17.8
		Hi PR	242	243	245	249.2	280	281	283	287.1	320	321	323	326.8	363	**364**	365	369.6	409	410	412	415.7	458	459	461	464.9
		Lo PR	120	122	125	129.8	127	129	132	137.0	134	135	138	143.3	139	**141**	144	148.6	144	146	149	153.9	151	152	155	160.4
	1580	MBh	47.4	48.0	49.4	51.5	47.0	47.6	49.0	51.1	45.8	46.4	47.8	49.9	43.7	44.3	45.7	47.8	41.1	41.8	43.2	45.3	38.8	39.5	40.9	43.0
		S/T	0.80	0.73	0.59	0.5	0.81	0.73	0.60	0.5	1.00	0.76	0.62	0.5	1.00	0.77	0.64	0.5	1.00	0.80	0.66	0.5	1.00	0.85	0.71	0.6
		ΔT	24	22	18	14	24	22	18	14	24	22	18	15	24	22	18	14	24	22	18	14	25	23	19	15
		kW	2.70	2.69	2.69	2.7	2.99	2.99	2.98	3.0	3.32	3.32	3.31	3.3	3.67	3.67	3.67	3.7	4.07	4.07	4.06	4.1	4.54	4.53	4.53	4.6
		Amps	9.4	9.4	9.4	9.5	10.7	10.7	10.7	10.8	12.2	12.2	12.2	12.3	13.9	13.9	13.8	13.9	15.7	15.7	15.6	15.8	17.8	17.8	17.8	17.9
		Hi PR	244	245	246	250.7	282	283	284	288.6	321	322	324	328.3	364	365	367	371.0	410	411	413	417.1	459	460	462	466.3
		Lo PR	122	123	126	131.1	129	130	133	138.3	135	137	140	144.6	140	142	145	150.0	146	147	150	155.2	152	154	157	161.8

IDB: Entering Indoor Dry Bulb Temperature

Shaded area reflects ACCA (TVA) conditions

Amps = outdoor unit amps (comp.+fan)

High and low pressures are measured at the liquid and suction service valves.

kW = Total system power

Expanded Cooling Data — GSXH504810**/CA*T4961*4A* (cont.)

			Outdoor Ambient Temperature																							
			65ºF				75ºF				85ºF				95ºF				105ºF				115ºF			
			Entering Indoor Wet Bulb Temperature																							
IDB	Airflow		59	63	67	71	59	63	67	71	59	63	67	71	59	63	67	71	59	63	67	71	59	63	67	71
80	1390	MBh	46.9	47.6	49.0	51.1	46.5	47.2	48.5	50.7	45.3	46.0	47.3	49.4	43.2	43.9	45.3	47.4	40.7	41.3	42.7	44.8	38.4	39.0	40.4	42.5
		S/T	0.88	0.80	0.67	0.5	1.00	0.81	0.68	0.5	1.00	0.83	0.70	0.6	1.00	0.85	0.72	0.6	1.00	1.00	0.74	0.6	1.00	1.00	0.79	0.7
		ΔT	29	27	24	20	29	27	24	20	30	28	24	20	29	27	24	20	29	27	23	20	30	28	25	21
		kW	2.68	2.68	2.68	2.7	2.98	2.97	2.97	3.0	3.30	3.30	3.30	3.3	3.66	3.66	3.65	3.7	4.06	4.05	4.05	4.1	4.52	4.52	4.52	4.5
		Amps	9.3	9.3	9.3	9.4	10.7	10.7	10.6	10.7	12.2	12.2	12.1	12.3	13.8	13.8	13.8	13.9	15.6	15.6	15.6	15.7	17.8	17.7	17.7	17.8
		Hi PR	242	243	245	249.0	280	281	283	286.9	320	321	322	326.6	362	364	365	369.4	409	410	411	415.5	458	459	460	464.7
		Lo PR	120	122	125	129.7	127	129	132	136.9	134	135	138	143.2	139	141	144	148.6	144	146	149	153.8	151	152	155	160.4
	1450	MBh	47.1	47.8	49.2	51.3	46.7	47.4	48.8	50.9	45.5	46.2	47.5	49.7	43.4	44.1	**45.5**	47.6	40.9	41.5	42.9	45.0	38.6	39.2	40.6	42.7
		S/T	0.89	0.82	0.69	0.5	1.00	0.83	0.69	0.6	1.00	0.85	0.72	0.6	1.00	0.87	**0.74**	0.6	1.00	1.00	0.76	0.6	1.00	1.00	0.81	0.7
		ΔT	29	27	23	20	29	27	23	19	29	27	24	20	29	27	**23**	19	29	27	23	19	30	28	24	20
		kW	2.69	2.68	2.68	2.70	2.98	2.98	2.97	3.00	3.31	3.31	3.30	3.32	3.66	3.66	**3.66**	3.68	4.06	4.06	4.05	4.08	4.53	4.52	4.52	4.54
		Amps	9.4	9.3	9.3	9.4	10.7	10.7	10.7	10.8	12.2	12.2	12.2	12.3	13.8	13.8	**13.8**	13.9	15.6	15.6	15.6	15.7	17.8	17.8	17.7	17.8
		Hi PR	243	244	245	249.7	281	282	283	287.6	320	321	323	327.3	363	364	**366**	370.0	409	410	412	416.1	458	459	461	465.3
		Lo PR	121	122	125	130.3	128	129	132	137.5	134	136	139	143.8	140	141	**144**	149.2	145	146	149	154.4	151	153	156	161.0
	1580	MBh	47.6	48.3	49.7	51.8	47.2	47.9	49.3	51.4	46.0	46.7	48.0	50.2	43.9	44.6	46.0	48.1	41.4	42.0	43.4	45.5	39.1	39.7	41.1	43.2
		S/T	0.92	0.85	0.72	0.6	1.00	0.85	0.72	0.6	1.00	0.88	0.75	0.6	1.00	0.90	0.76	0.6	1.00	1.00	0.79	0.6	1.00	1.00	0.84	0.7
		ΔT	28	26	23	19	28	26	23	19	29	27	23	19	28	26	23	19	28	26	22	18	29	27	24	20
		kW	2.70	2.69	2.69	2.7	2.99	2.99	2.98	3.0	3.32	3.32	3.31	3.3	3.67	3.67	3.67	3.7	4.07	4.07	4.06	4.1	4.54	4.53	4.53	4.6
		Amps	9.4	9.4	9.4	9.5	10.7	10.7	10.7	10.8	12.2	12.2	12.2	12.3	13.9	13.9	13.8	13.9	15.7	15.7	15.7	15.8	17.8	17.8	17.8	17.9
		Hi PR	244	245	247	251.1	282	283	285	289.0	322	323	325	328.7	365	366	367	371.5	411	412	413	417.5	460	461	463	466.7
		Lo PR	122	124	127	131.6	129	131	134	138.8	136	137	140	145.2	141	142	145	150.5	146	148	151	155.7	153	154	157	162.3
85	1390	MBh	47.7	48.4	49.7	51.8	47.3	47.9	49.3	51.4	46.1	46.7	48.1	50.2	44.0	44.7	46.0	48.1	41.5	42.1	43.5	45.6	39.1	39.8	41.2	43.3
		S/T	1.00	0.90	0.77	0.6	1.00	0.91	0.78	0.6	1.00	1.00	0.80	0.7	1.00	1.00	0.82	0.7	1.00	1.00	0.84	0.7	1.00	1.00	0.89	0.8
		ΔT	33	31	28	24	33	31	28	24	34	32	28	24	33	31	28	24	33	31	27	23	34	32	29	25
		kW	2.69	2.69	2.68	2.7	2.98	2.98	2.97	3.0	3.31	3.31	3.30	3.3	3.67	3.66	3.66	3.7	4.06	4.06	4.06	4.1	4.53	4.53	4.52	4.5
		Amps	9.4	9.3	9.3	9.4	10.7	10.7	10.7	10.8	12.2	12.2	12.2	12.3	13.8	13.8	13.8	13.9	15.7	15.6	15.6	15.7	17.8	17.8	17.7	17.9
		Hi PR	243	244	246	250.2	281	282	284	288.1	321	322	324	327.8	364	365	366	370.5	410	411	412	416.6	459	460	462	465.8
		Lo PR	122	123	126	131.5	129	131	134	138.7	135	137	140	145.0	141	142	145	150.3	146	148	151	155.6	153	154	157	162.2
	1450	MBh	47.9	48.6	49.9	52.1	47.5	48.1	49.5	51.6	46.3	46.9	48.3	50.4	44.2	44.9	46.2	48.4	41.7	42.3	43.7	45.8	39.3	40.0	41.4	43.5
		S/T	1.00	0.92	0.79	0.6	1.00	0.93	0.79	0.7	1.00	1.00	0.82	0.7	1.00	1.00	0.84	0.7	1.00	1.00	0.86	0.7	1.00	1.00	0.91	0.8
		ΔT	33	31	27	23	33	31	27	23	33	31	27	24	33	31	27	23	33	31	27	23	34	32	28	24
		kW	2.69	2.69	2.69	2.71	2.99	2.98	2.98	3.00	3.32	3.31	3.31	3.33	3.67	3.67	3.66	3.69	4.07	4.06	4.06	4.08	4.53	4.53	4.53	4.55
		Amps	9.4	9.4	9.3	9.5	10.7	10.7	10.7	10.8	12.2	12.2	12.2	12.3	13.9	13.8	13.8	13.9	15.7	15.7	15.6	15.7	17.8	17.8	17.8	17.9
		Hi PR	244	245	247	250.8	282	283	285	288.7	322	323	324	328.4	364	365	367	371.2	410	411	413	417.3	460	461	462	466.5
		Lo PR	123	124	127	132.1	130	131	134	139.3	136	138	141	145.6	141	143	146	150.9	147	148	151	156.2	153	155	158	162.7
	1580	MBh	48.4	49.1	50.4	52.6	48.0	48.7	50.0	52.1	46.8	47.4	48.8	50.9	44.7	45.4	46.7	48.9	42.2	42.8	44.2	46.3	39.8	40.5	41.9	44.0
		S/T	1.00	0.95	0.81	0.7	1.00	0.95	0.82	0.7	1.00	1.00	0.84	0.7	1.00	1.00	0.86	0.7	1.00	1.00	0.88	0.7	1.00	1.00	1.00	0.8
		ΔT	32	30	27	23	32	30	26	23	32	30	27	23	32	30	26	23	32	30	26	22	33	31	27	24
		kW	2.70	2.70	2.69	2.7	3.00	2.99	2.99	3.0	3.32	3.32	3.32	3.3	3.68	3.68	3.67	3.7	4.08	4.07	4.07	4.1	4.54	4.54	4.53	4.6
		Amps	9.4	9.4	9.4	9.5	10.8	10.8	10.7	10.8	12.3	12.3	12.2	12.3	13.9	13.9	13.9	14.0	15.7	15.7	15.7	15.8	17.8	17.8	17.8	17.9
		Hi PR	245	246	248	252.2	283	284	286	290.1	323	324	326	329.8	366	367	368	372.6	412	413	414	418.7	461	462	464	467.9
		Lo PR	124	125	128	133.4	131	133	136	140.6	137	139	142	146.9	143	144	147	152.3	148	149	152	157.5	155	156	159	164.1

IDB: Entering Indoor Dry Bulb Temperature

Shaded area reflects AHRI conditions

Amps = outdoor unit amps (comp.+fan)

High and low pressures are measured at the liquid and suction service valves.

kW = Total system power

Expanded Cooling Data — GSXH506010**/CA*T4961*4A*

			Outdoor Ambient Temperature																							
			65ºF				75ºF				85ºF				95ºF				105ºF				115ºF			
			Entering Indoor Wet Bulb Temperature																							
IDB	Airflow		59	63	67	71	59	63	67	71	59	63	67	71	59	63	67	71	59	63	67	71	59	63	67	71
70	1460	MBh	56.7	57.5	59.2	-	56.2	57.0	58.7	-	54.7	55.5	57.2	-	52.2	53.0	54.7	-	49.1	49.9	51.6	-	46.3	47.1	48.8	-
		S/T	0.61	0.54	0.41	-	0.61	0.54	0.42	-	0.63	0.56	0.44	-	0.65	0.58	0.46	-	0.67	0.60	0.48	-	0.72	0.65	0.53	-
		ΔT	22	20	16	-	22	20	16	-	23	20	16	-	22	20	16	-	22	20	16	-	23	21	17	-
		kW	3.37	3.37	3.36	-	3.76	3.76	3.75	-	4.20	4.20	4.19	-	4.68	4.67	4.67	-	5.21	5.20	5.20	-	5.83	5.82	5.82	-
		Amps	12.5	12.5	12.4	-	14.3	14.3	14.2	-	16.3	16.3	16.2	-	18.5	18.4	18.4	-	20.9	20.9	20.8	-	23.7	23.7	23.7	-
		Hi PR	247	249	250	-	286	287	289	-	327	328	330	-	370	371	373	-	417	419	420	-	468	469	471	-
		Lo PR	111	112	115	-	117	119	121	-	123	124	127	-	128	129	132	-	133	134	137	-	139	140	143	-
	1700	MBh	57.9	58.7	60.3	-	57.4	58.2	59.8	-	55.9	56.7	58.4	-	53.4	54.2	55.9	-	50.3	51.1	52.8	-	47.5	48.3	50.0	-
		S/T	0.64	0.57	0.45	-	0.65	0.58	0.45	-	0.67	0.60	0.48	-	0.69	0.62	0.50	-	0.71	0.64	0.52	-	0.75	0.69	0.56	-
		ΔT	21	19	15	-	21	19	15	-	21	19	15	-	21	19	15	-	20	18	14	-	22	20	16	-
		kW	3.39	3.39	3.38	-	3.79	3.78	3.78	-	4.22	4.22	4.21	-	4.70	4.69	4.69	-	5.23	5.23	5.22	-	5.85	5.85	5.84	-
		Amps	12.6	12.6	12.5	-	14.4	14.4	14.3	-	16.4	16.4	16.3	-	18.6	18.5	18.5	-	21.0	21.0	20.9	-	23.8	23.8	23.8	-
		Hi PR	250	251	253	-	289	290	292	-	329	330	332	-	373	374	376	-	420	421	423	-	470	471	473	-
		Lo PR	113	114	117	-	120	121	124	-	125	127	130	-	130	132	134	-	135	137	139	-	141	143	145	-
	1930	MBh	59.3	60.1	61.8	-	58.8	59.6	61.3	-	57.4	58.2	59.8	-	54.9	55.7	57.3	-	51.8	52.6	54.2	-	49.0	49.8	51.4	-
		S/T	0.64	0.57	0.45	-	0.65	0.58	0.46	-	0.67	0.60	0.48	-	0.69	0.62	0.50	-	0.71	0.64	0.52	-	1.00	0.69	0.56	-
		ΔT	20	17	13	-	20	17	13	-	20	18	14	-	20	17	13	-	19	17	13	-	21	18	14	-
		kW	3.41	3.41	3.40	-	3.80	3.80	3.79	-	4.24	4.24	4.23	-	4.72	4.71	4.71	-	5.25	5.24	5.24	-	5.87	5.87	5.86	-
		Amps	12.7	12.6	12.6	-	14.5	14.4	14.4	-	16.5	16.5	16.4	-	18.6	18.6	18.6	-	21.1	21.1	21.0	-	23.9	23.9	23.9	-
		Hi PR	253	254	256	-	292	293	294	-	332	333	335	-	376	377	379	-	423	424	426	-	473	474	476	-
		Lo PR	116	117	120	-	122	124	126	-	128	130	132	-	133	134	137	-	138	139	142	-	144	145	148	-
75	1460	MBh	56.7	57.5	59.2	61.7	56.2	57.0	58.7	61.2	54.8	55.6	57.2	59.8	52.2	**53.0**	54.7	57.3	49.2	50.0	51.6	54.2	46.4	47.2	48.8	51.4
		S/T	0.72	0.65	0.53	0.4	0.73	0.66	0.54	0.4	0.75	0.68	0.56	0.4	0.77	**0.70**	0.58	0.4	0.79	0.72	0.60	0.5	1.00	0.77	0.64	0.5
		ΔT	27	25	21	17	27	25	21	17	27	25	21	17	27	**25**	21	17	27	25	20	16	28	26	22	18
		kW	3.37	3.36	3.36	3.4	3.76	3.76	3.75	3.8	4.20	4.20	4.19	4.2	4.67	**4.67**	4.66	4.7	5.20	5.20	5.19	5.2	5.83	5.82	5.82	5.8
		Amps	12.5	12.5	12.4	12.6	14.3	14.3	14.2	14.4	16.3	16.3	16.2	16.4	18.4	**18.4**	18.4	18.5	20.9	20.9	20.8	21.0	23.7	23.7	23.7	23.8
		Hi PR	248	249	250	254.7	286	287	289	293.4	327	328	330	334.0	371	**372**	373	377.7	418	419	420	424.8	468	469	471	475.0
		Lo PR	111	112	115	119.4	117	119	121	126.0	123	124	127	131.9	128	**129**	132	136.8	133	134	137	141.6	139	140	143	147.6
	1700	MBh	57.9	58.7	60.4	62.9	57.4	58.2	59.9	62.4	56.0	56.7	58.4	61.0	53.4	**54.2**	55.9	58.5	50.4	51.2	52.8	55.4	47.6	48.4	50.0	52.6
		S/T	0.76	0.69	0.57	0.4	0.76	0.70	0.57	0.4	0.79	0.72	0.59	0.5	0.80	**0.74**	0.61	0.5	1.00	0.76	0.63	0.5	1.00	0.80	0.68	0.5
		ΔT	26	23	19	15	26	23	19	15	26	24	20	15	26	**23**	19	15	25	23	19	15	27	24	20	16
		kW	3.39	3.39	3.38	3.41	3.78	3.78	3.77	3.80	4.22	4.22	4.21	4.24	4.70	**4.69**	4.69	4.72	5.23	5.22	5.22	5.25	5.85	5.84	5.84	5.87
		Amps	12.6	12.6	12.5	12.7	14.4	14.4	14.3	14.5	16.4	16.4	16.3	16.5	18.5	**18.5**	18.5	18.6	21.0	21.0	20.9	21.1	23.8	23.8	23.8	23.9
		Hi PR	250	251	253	257.4	289	290	292	296.1	330	331	332	336.7	373	**374**	376	380.3	420	421	423	427.4	471	472	473	477.7
		Lo PR	113	114	117	121.8	120	121	124	128.4	125	127	130	134.2	130	**132**	135	139.2	135	137	139	144.0	141	143	145	150.0
	1930	MBh	59.4	60.2	61.8	64.4	58.9	59.7	61.3	63.9	57.4	58.2	59.9	62.4	54.9	**55.7**	57.4	59.9	51.8	52.6	54.3	56.8	49.0	49.8	51.5	54.0
		S/T	0.76	0.69	0.57	0.4	0.77	0.70	0.57	0.4	0.79	0.72	0.60	0.5	0.81	**0.74**	0.61	0.5	1.00	0.76	0.63	0.5	1.00	0.80	0.68	0.6
		ΔT	24	22	18	14	24	22	18	14	25	23	18	14	24	**22**	18	14	24	22	18	14	25	23	19	15
		kW	3.41	3.41	3.40	3.4	3.80	3.80	3.79	3.8	4.24	4.24	4.23	4.3	4.71	**4.71**	4.70	4.7	5.24	5.24	5.23	5.3	5.87	5.86	5.86	5.9
		Amps	12.7	12.6	12.6	12.7	14.4	14.4	14.4	14.5	16.5	16.4	16.4	16.5	18.6	**18.6**	18.6	18.7	21.1	21.0	21.0	21.1	23.9	23.9	23.9	24.0
		Hi PR	253	254	256	260.1	292	293	295	298.8	332	333	335	339.3	376	**377**	379	383.0	423	424	426	430.1	473	474	476	480.4
		Lo PR	116	117	120	124.5	122	124	127	131.1	128	130	132	137.0	133	**134**	137	141.9	138	139	142	146.7	144	145	148	152.7

IDB: Entering Indoor Dry Bulb Temperature

Shaded area reflects ACCA (TVA) conditions

Amps = outdoor unit amps (comp.+fan)

High and low pressures are measured at the liquid and suction service valves.

kW = Total system power

Expanded Cooling Data — GSXH506010**/CA*T4961*4A* (cont.)

			Outdoor Ambient Temperature																							
			65ºF				75ºF				85ºF				95ºF				105ºF				115ºF			
			Entering Indoor Wet Bulb Temperature																							
IDB	Airflow		59	63	67	71	59	63	67	71	59	63	67	71	59	63	67	71	59	63	67	71	59	63	67	71
80	1460	MBh	57.0	57.8	59.5	62.0	56.5	57.3	59.0	61.5	55.1	55.8	57.5	60.1	52.5	53.3	55.0	57.6	49.5	50.3	51.9	54.5	46.7	47.5	49.1	51.7
		S/T	0.84	0.77	0.64	0.5	0.84	0.77	0.65	0.5	1.00	0.80	0.67	0.5	1.00	0.81	0.69	0.6	1.00	0.83	0.71	0.6	1.00	0.88	0.76	0.6
		ΔT	32	30	26	21	32	30	26	21	32	30	26	22	32	30	26	21	32	29	25	21	33	31	27	22
		kW	3.37	3.37	3.36	3.4	3.76	3.76	3.75	3.8	4.20	4.20	4.19	4.2	4.68	4.67	4.67	4.7	5.21	5.20	5.20	5.2	5.83	5.82	5.82	5.8
		Amps	12.5	12.5	12.4	12.6	14.3	14.3	14.2	14.4	16.3	16.3	16.2	16.4	18.5	18.4	18.4	18.5	20.9	20.9	20.8	21.0	23.7	23.7	23.7	23.8
		Hi PR	248	249	251	255.2	287	288	290	293.9	327	328	330	334.5	371	372	374	378.1	418	419	421	425.2	468	469	471	475.5
		Lo PR	111	112	115	119.9	118	119	122	126.5	124	125	128	132.3	128	130	133	137.3	133	135	137	142.1	139	141	143	148.1
	1700	MBh	58.2	59.0	60.7	63.2	57.7	58.5	60.2	62.7	56.2	57.0	58.7	61.3	53.7	54.5	**56.2**	58.7	50.7	51.5	53.1	55.7	47.9	48.6	50.3	52.9
		S/T	0.87	0.80	0.68	0.6	0.88	0.81	0.69	0.6	1.00	0.83	0.71	0.6	1.00	0.85	**0.73**	0.6	1.00	0.87	0.75	0.6	1.00	0.92	0.79	0.7
		ΔT	30	28	24	20	30	28	24	20	31	29	24	20	30	28	**24**	20	30	28	24	20	31	29	25	21
		kW	3.39	3.39	3.38	3.41	3.78	3.78	3.77	3.80	4.22	4.22	4.21	4.24	4.70	4.69	**4.69**	4.72	5.23	5.22	5.22	5.25	5.85	5.85	5.84	5.87
		Amps	12.6	12.6	12.5	12.7	14.4	14.4	14.3	14.5	16.4	16.4	16.3	16.5	18.6	18.5	**18.5**	18.6	21.0	21.0	20.9	21.1	23.8	23.8	23.8	23.9
		Hi PR	251	252	254	257.8	289	291	292	296.6	330	331	333	337.1	374	375	**377**	380.8	421	422	424	427.9	471	472	474	478.1
		Lo PR	114	115	118	122.3	120	121	124	128.9	126	127	130	134.7	131	132	**135**	139.6	136	137	140	144.5	142	143	146	150.5
	1930	MBh	59.7	60.4	62.1	64.7	59.2	59.9	61.6	64.2	57.7	58.5	60.2	62.7	55.2	56.0	57.6	60.2	52.1	52.9	54.6	57.1	49.3	50.1	51.8	54.3
		S/T	0.87	0.81	0.68	0.6	1.00	0.81	0.69	0.6	1.00	0.83	0.71	0.6	1.00	0.85	0.73	0.6	1.00	0.87	0.75	0.6	1.00	1.00	0.80	0.7
		ΔT	29	27	23	19	29	27	23	19	30	27	23	19	29	27	23	19	29	27	23	18	30	28	24	20
		kW	3.41	3.41	3.40	3.4	3.80	3.80	3.79	3.8	4.24	4.24	4.23	4.3	4.72	4.71	4.71	4.7	5.25	5.24	5.24	5.3	5.87	5.86	5.86	5.9
		Amps	12.7	12.6	12.6	12.8	14.5	14.4	14.4	14.6	16.5	16.5	16.4	16.6	18.6	18.6	18.6	18.7	21.1	21.0	21.0	21.2	23.9	23.9	23.9	24.0
		Hi PR	253	255	256	260.5	292	293	295	299.2	333	334	336	339.8	376	377	379	383.5	423	425	426	430.6	474	475	477	480.8
		Lo PR	116	118	120	125.0	123	124	127	131.6	129	130	133	137.4	134	135	138	142.3	138	140	143	147.2	144	146	149	153.2
85	1460	MBh	58.0	58.7	60.4	63.0	57.5	58.2	59.9	62.5	56.0	56.8	58.5	61.0	53.5	54.3	55.9	58.5	50.4	51.2	52.9	55.4	47.6	48.4	50.1	52.6
		S/T	1.00	0.86	0.74	0.6	1.00	0.87	0.74	0.6	1.00	0.89	0.76	0.6	1.00	0.91	0.78	0.7	1.00	1.00	0.80	0.7	1.00	1.00	0.85	0.7
		ΔT	36	34	30	26	36	34	30	26	36	34	30	26	36	34	30	26	36	34	30	25	37	35	31	27
		kW	3.38	3.37	3.37	3.4	3.77	3.77	3.76	3.8	4.21	4.21	4.20	4.2	4.68	4.68	4.67	4.7	5.21	5.21	5.20	5.2	5.84	5.83	5.83	5.9
		Amps	12.5	12.5	12.5	12.6	14.3	14.3	14.3	14.4	16.3	16.3	16.3	16.4	18.5	18.5	18.4	18.6	20.9	20.9	20.9	21.0	23.8	23.7	23.7	23.9
		Hi PR	249	250	252	256.3	288	289	291	295.0	329	330	331	335.6	372	373	375	379.3	419	420	422	426.4	470	471	472	476.6
		Lo PR	113	114	117	121.5	119	121	124	128.2	125	127	129	134.0	130	131	134	138.9	135	136	139	143.7	141	142	145	149.7
	1700	MBh	59.2	59.9	61.6	64.2	58.7	59.4	61.1	63.7	57.2	58.0	59.7	62.2	54.7	55.5	57.1	59.7	51.6	52.4	54.1	56.6	48.8	49.6	51.3	53.8
		S/T	1.00	0.90	0.77	0.6	1.00	0.90	0.78	0.6	1.00	0.92	0.80	0.7	1.00	0.94	0.82	0.7	1.00	1.00	0.84	0.7	1.00	1.00	0.89	0.8
		ΔT	35	33	29	24	35	33	28	24	35	33	29	25	35	32	28	24	34	32	28	24	36	34	29	25
		kW	3.40	3.40	3.39	3.42	3.79	3.79	3.78	3.81	4.23	4.23	4.22	4.25	4.71	4.70	4.70	4.73	5.24	5.23	5.23	5.26	5.86	5.85	5.85	5.88
		Amps	12.6	12.6	12.6	12.7	14.4	14.4	14.4	14.5	16.4	16.4	16.4	16.5	18.6	18.6	18.5	18.7	21.0	21.0	21.0	21.1	23.9	23.8	23.8	24.0
		Hi PR	252	253	255	259.0	291	292	293	297.7	331	332	334	338.3	375	376	378	381.9	422	423	425	429.0	472	473	475	479.3
		Lo PR	115	116	119	123.9	122	123	126	130.5	128	129	132	136.4	133	134	137	141.3	137	139	141	146.1	143	145	147	152.1
	1930	MBh	60.6	61.4	63.1	65.6	60.1	60.9	62.6	65.1	58.6	59.4	61.1	63.7	56.1	56.9	58.6	61.1	53.1	53.8	55.5	58.1	50.2	51.0	52.7	55.3
		S/T	1.00	0.90	0.77	0.6	1.00	0.90	0.78	0.7	1.00	0.93	0.80	0.7	1.00	1.00	0.82	0.7	1.00	1.00	0.84	0.7	1.00	1.00	0.89	0.8
		ΔT	34	31	27	23	34	31	27	23	34	32	28	23	33	31	27	23	33	31	27	23	35	32	28	24
		kW	3.42	3.41	3.41	3.4	3.81	3.81	3.80	3.8	4.25	4.25	4.24	4.3	4.72	4.72	4.71	4.7	5.25	5.25	5.24	5.3	5.88	5.87	5.87	5.9
		Amps	12.7	12.7	12.7	12.8	14.5	14.5	14.4	14.6	16.5	16.5	16.5	16.6	18.7	18.7	18.6	18.8	21.1	21.1	21.1	21.2	23.9	23.9	23.9	24.0
		Hi PR	255	256	257	261.7	293	294	296	300.4	334	335	337	341.0	378	379	380	384.6	425	426	427	431.7	475	476	478	482.0
		Lo PR	118	119	122	126.6	124	126	129	133.3	130	132	134	139.1	135	137	139	144.0	140	141	144	148.8	146	147	150	154.8

IDB: Entering Indoor Dry Bulb Temperature

Shaded area reflects AHRI conditions

Amps = outdoor unit amps (comp.+fan)

High and low pressures are measured at the liquid and suction service valves.

kW = Total system power

GSXH501810**/CA*TA1818*4A* Conditions: 80 °F IBD, 67 °F IWB @ 600 CFM				
Outdoor Tem. ° F.	Total BTU/h	Sensible BTU/h	Latent BTU/h	Total Watts
75	18,850	13,250	5,600	1,190
80	18,650	13,350	5,300	1,260
85	18,400	13,400	5,000	1,320
90	18,000	13,300	4,700	1,390
95	**17,600**	**13,150**	**4,450**	**1,450**
100	17,150	12,950	4,200	1,530
105	16,650	12,750	3,900	1,610
110	16,200	12,800	3,400	1,700
115	15,750	12,850	2,900	1,790
TVA Conditions @ 95° OD DB, 75° ID DB 63° ID WB				
95°	**17,000**	**12,850**	**4,150**	**1,460**

GSXH502410**/CA*TA2422*4A* Conditions: 80 °F IBD, 67 °F IWB @ 795 CFM				
Outdoor Tem. ° F.	Total BTU/h	Sensible BTU/h	Latent BTU/h	Total Watts
75	25,300	17,150	8,150	1,580
80	25,000	17,250	7,750	1,670
85	24,700	17,300	7,400	1,750
90	24,150	17,150	7,000	1,840
95	**23,600**	**17,000**	**6,600**	**1,930**
100	22,950	16,750	6,200	2,030
105	22,300	16,500	5,800	2,130
110	21,700	16,600	5,100	2,250
115	21,100	16,650	4,450	2,370
TVA Conditions @ 95° OD DB, 75° ID DB 63° ID WB				
95°	**22,750**	**16,600**	**6,150**	**1,930**

GSXH503010**/CA*TA3022*4A* Conditions: 80 °F IBD, 67 °F IWB @ 1000 CFM				
Outdoor Tem. ° F.	Total BTU/h	Sensible BTU/h	Latent BTU/h	Total Watts
75	30,450	21,200	9,250	1,870
80	30,100	21,300	8,800	1,970
85	29,700	21,400	8,300	2,070
90	29,050	21,200	7,850	2,180
95	**28,400**	**21,000**	**7,400**	**2,280**
100	27,600	20,750	6,850	2,400
105	26,800	20,450	6,350	2,510
110	26,100	20,550	5,550	2,650
115	25,350	20,600	4,750	2,790
TVA Conditions @ 95° OD DB, 75° ID DB 63° ID WB				
95°	**27,400**	**20,550**	**6,850**	**2,280**

GSXH503610**/CA*TA3626*4A* Conditions: 80 °F IBD, 67 °F IWB @ 1145 CFM				
Outdoor Tem. ° F.	Total BTU/h	Sensible BTU/h	Latent BTU/h	Total Watts
75	36,650	25,900	10,750	2,280
80	36,200	26,050	10,150	2,410
85	35,750	26,150	9,600	2,530
90	35,000	25,900	9,100	2,660
95	**34,200**	**25,650**	**8,550**	**2,790**
100	33,250	25,300	7,950	2,940
105	32,300	24,950	7,350	3,090
110	31,450	25,050	6,400	3,270
115	30,550	25,150	5,400	3,450
TVA Conditions @ 95° OD DB, 75° ID DB 63° ID WB				
95°	**33,000**	**25,050**	**7,950**	**2,800**

GSXH504210**/CA*TA4230*4A* Conditions: 80 °F IBD, 67 °F IWB @ 1400 CFM				
Outdoor Tem. ° F.	Total BTU/h	Sensible BTU/h	Latent BTU/h	Total Watts
75	42,900	31,100	11,800	2,640
80	42,400	31,250	11,150	2,780
85	41,850	31,400	10,450	2,920
90	40,950	31,100	9,850	3,070
95	**40,000**	**30,800**	**9,200**	**3,220**
100	38,900	30,400	8,500	3,390
105	37,750	29,950	7,800	3,560
110	36,750	30,100	6,650	3,760
115	35,750	30,200	5,550	3,960
TVA Conditions @ 95° OD DB, 75° ID DB 63° ID WB				
95°	**38,550**	**30,100**	**8,450**	**3,230**

GSXH504810**/CA*T4961*4A* Conditions: 80 °F IBD, 67 °F IWB @ 1450 CFM				
Outdoor Tem. ° F.	Total BTU/h	Sensible BTU/h	Latent BTU/h	Total Watts
75	48,750	33,850	14,900	2,970
80	48,150	34,000	14,150	3,140
85	47,550	34,150	13,400	3,300
90	46,500	33,850	12,650	3,480
95	**45,450**	**33,550**	**11,900**	**3,660**
100	44,200	33,100	11,100	3,860
105	42,900	32,600	10,300	4,050
110	41,750	32,750	9,000	4,290
115	40,600	32,850	7,750	4,520
TVA Conditions @ 95° OD DB, 75° ID DB 63° ID WB				
95°	**43,850**	**32,800**	**11,050**	**3,660**

GSXH506010**/CA*T4961*4A* Conditions: 80 °F IBD, 67 °F IWB @ 1700 CFM				
Outdoor Tem. ° F.	Total BTU/h	Sensible BTU/h	Latent BTU/h	Total Watts
75	60,150	41,250	18,900	3,770
80	59,450	41,450	18,000	3,990
85	58,700	41,600	17,100	4,210
90	57,450	41,200	16,250	4,450
95	**56,200**	**40,800**	**15,400**	**4,690**
100	54,650	40,250	14,400	4,960
105	53,100	39,650	13,450	5,220
110	51,700	39,800	11,900	5,530
115	50,300	39,900	10,400	5,840
TVA Conditions @ 95° OD DB, 75° ID DB 63° ID WB				
95°	**54,250**	**39,900**	**14,350**	**4,690**

ECN	REV	ZONE	DESCRIPTION	CHK	DR	DATE

GSZH503610-A-UNIT_DIMS_SPEC

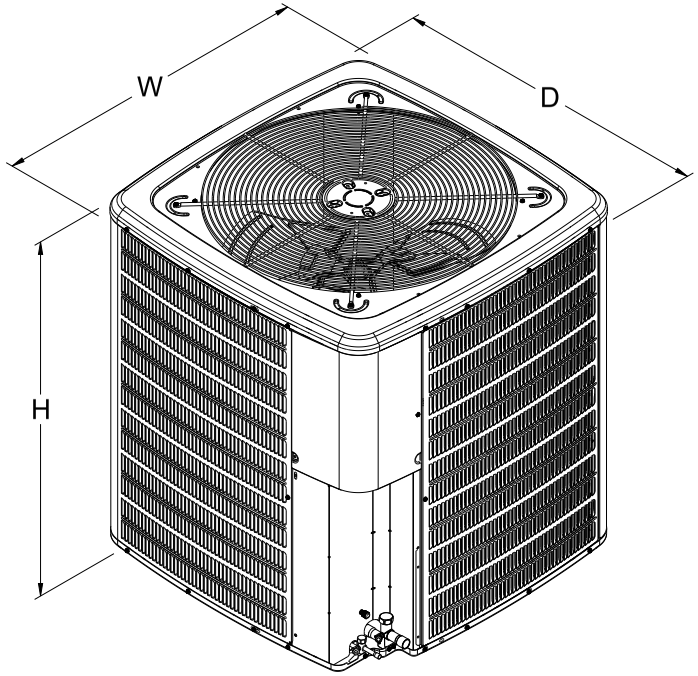

Model	Dimensions		
	W"	D"	H"
GSXH501810A*	26	26	27
GSXH502410A*	29	29	32
GSXH503010A*	35½	35½	39½
GSXH503610A*	35½	35½	39½
GSXH504210A*	35½	35½	36½
GSXH504810A*	35½	35½	36½
GSXH506010A*	35½	35½	41⅝

*Note: All the Dimensions (W, D, H) are for reference only.

SPECIAL CHARACTERISTICS: (REFER MSP 822-01 FOR DETAILS)
◇ = CRITICAL CHARACTERISTIC REQUIRES AN INITIAL CPK OF 1.33 AND USE OF STATISTICAL PROCESS CONTROL.
⬠ = SIGNIFICANT CHARACTERISTIC REQUIRES AN INITIAL CPK OF 1.00 AND USE OF STATISTICAL PROCESS CONTROL. INABILITY TO MEET THE REQUIRED INITIAL CPK VALUE WILL REQUIRE 100% INSPECTION.

COMPONENTS AND MATERIALS SPECIFIED HEREIN WILL ALSO CONFORM TO THE APPLICABLE SECTION OF GOODMAN MSP 860-01 WORKMANSHIP STANDARD.

CONFIDENTIAL PROPERTY OF GOODMAN MANUFACTURING COMPANY, L.P. OR ITS AFFILIATES NOT TO BE DISCLOSED TO OTHERS, COPIED, OR USED FOR ANY PURPOSE EXCEPT AS AUTHORIZED IN WRITING. MUST BE RETURNED UPON DEMAND, ON COMPLETION OF ORDER, OR OTHER PURPOSE FOR WHICH IT WAS LENT

Goodman Manufacturing Co., L.P.

DRAWING TO BE INTERPRETED IN ACCORDANCE WITH ASME Y14.100

DIMENSIONS ARE IN INCHES UNLESS OTHERWISE NOTED.

TOLERANCES UNLESS OTHERWISE NOTED
ANGLES ± 1.5°
.X ± .1
.XX ± .03
.XXX ± .015
HOLES Ø : ± .005
TUBE CUT LG: ± .063

TITLE: GSXH5

DWN:	ENG:	SCALE: NTS
DATE:	CHK:	SHEET: 1 OF 1
	DWG. NO.	

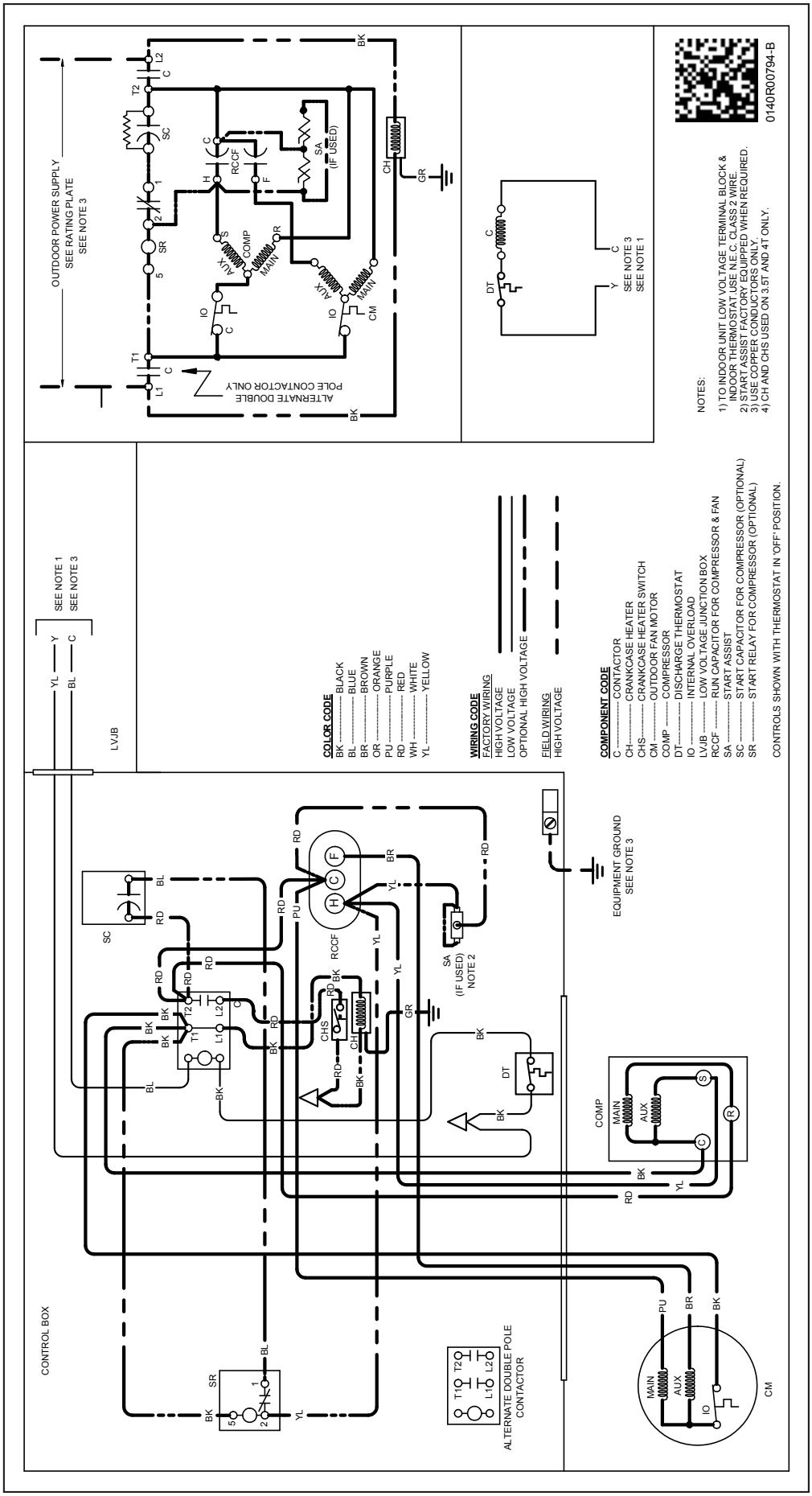

WARNING

High Voltage: Disconnect all power before servicing or installing this unit. Multiple power sources may be present. Failure to do so may cause property damage, personal injury, or death.

Wiring is subject to change. Always refer to the wiring diagram or the unit for the most up-to-date wiring.

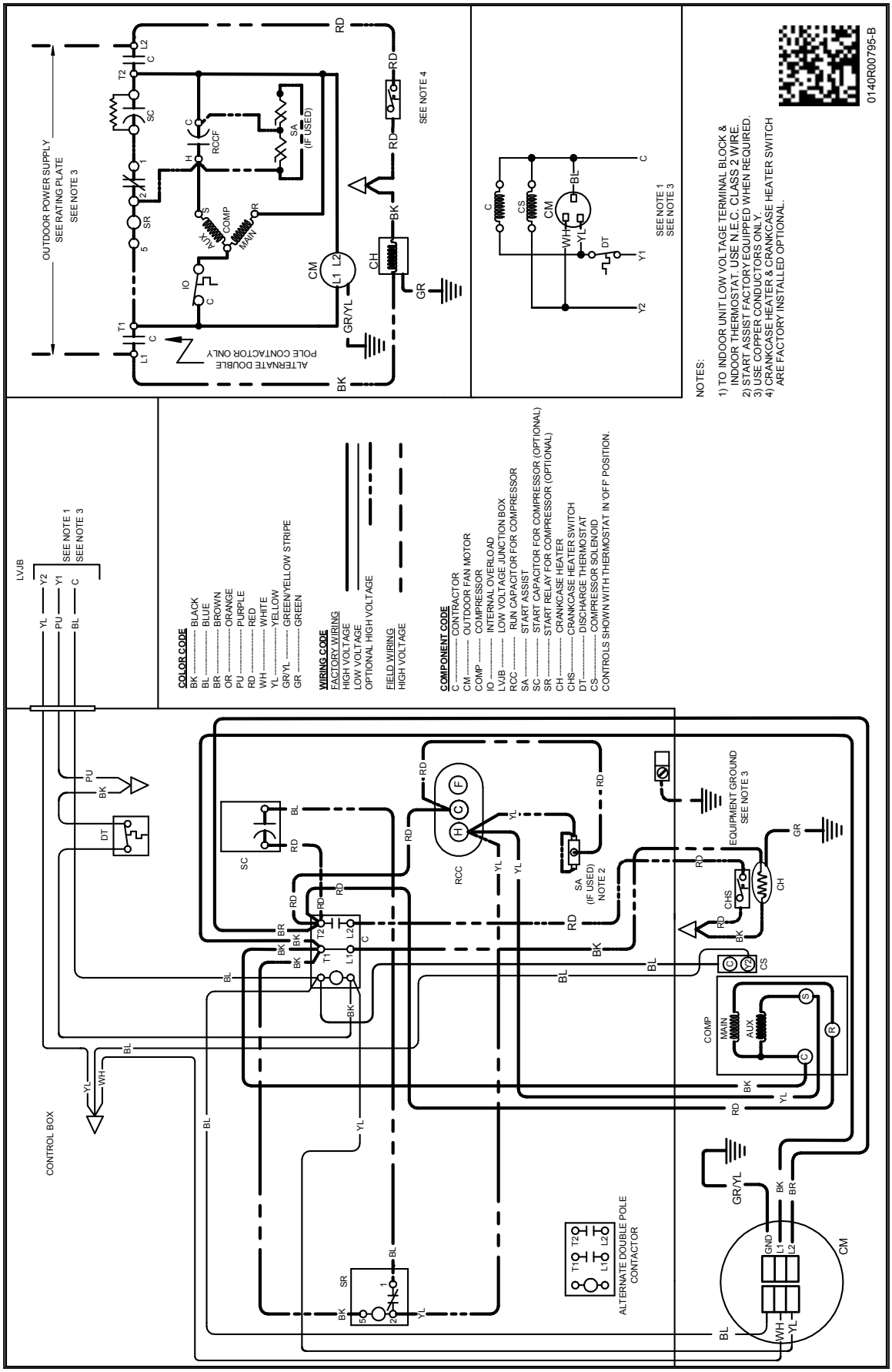

WARNING

High Voltage: Disconnect all power before servicing or installing this unit. Multiple power sources may be present. Failure to do so may cause property damage, personal injury, or death.

Wiring is subject to change. Always refer to the wiring diagram or the unit for the most up-to-date wiring.

MODEL	DESCRIPTION	GSXH5 01810A*	GSXH5 02410A*	GSXH5 03010A*	GSXH5 03610A*	GSXH5 04210A*	GSXH5 04810A*	GSXH5 06010A*
ABK-20	Anchor Bracket Kit ^	X	X	X	X	X	X	X
ABK-21	Anchor Bracket Kit ^							
ASC-01	Anti-Short Cycle Kit	X	X	X	X	X	X	X
CSR-U-1	Hard-start Kit	X	X	X	X			
CSR-U-2	Hard-start Kit				X	X	X	X
CSR-U-3	Hard-start Kit						X	X
FSK01A[1]	Freeze Protection Kit	X	X	X	X	X	X	X
LSK02A	Liquid Line Solenoid Kit	X	X	X	X	X	X	X
LAKT01	Low-Ambient Kit	X	X	X	X	X	X	
0130R00000S	Low-Pressure Switch Kit	X	X	X	X	X	X	X
TXV-FX-KX-2T [2]	TXV Kit	X	X					
TXV-FX-KX-3T [2]	TXV Kit			X	X			
TXV-FX-KX-5T [2]	TXV Kit					X	X	X

^ Contains 20 brackets; four brackets needed to anchor unit to pad

[1] Installed on indoor coil

[2] Condensing units and heat pumps with reciprocating or rotary compressors require the use of start-assist components when used in conjunction with an indoor coil using a non-bleed thermal expansion valve refrigerant metering device or liquid line solenoid kit. The TXV should always be sized based on the tonnage of the outdoor unit.

All AHRI system ratings are accessible in the System Configurator tool via PartnerLink.

Our continuing commitment to quality products may mean a change in specifications without notice.
©2022 ***DAIKIN COMFORT TECHNOLOGIES MANUFACTURING, L.P.*** • Houston, Texas • Printed in the USA.